LBL-14546
UC-95 c.1

Lawrence Berkeley Laboratory
UNIVERSITY OF CALIFORNIA

ENERGY & ENVIRONMENT DIVISION

ENERGY-EFFICIENT INCANDESCENT LAMP:
FINAL REPORT

RECEIVED
LAWRENCE
BERKELEY LABORATORY
1982
LIBRARY AND
DOCUMENTS SECTION

Duro-Test Corporation

April 1982

For Reference

Not to be taken from this room

Prepared for the U.S. Department of Energy under Contract DE-AC03-76SF00098

LBL-14546
EEB-L-82-06
L-65

ENERGY-EFFICIENT INCANDESCENT LAMP:

FINAL REPORT*

Lighting Systems Research
Lawrence Berkeley Laboratory
University of California
Berkeley, California 94720

Submitted April 15, 1982

The work described in this report was funded by the Assistant Secretary for Conservation and Renewable Energy, Office of Building Energy Research & Development, Building Equipment Division of the U.S. Department of Energy under Contract No. DE-AC03-76SF00098.

*Duro-Test Corporation
North Bergen, New Jersey 07047
Subcontract 4506010

FINAL REPORT

on DOE-LBL Subcontract 4 506 010

16 December 1980 to 30 November 1981

CONTENTS

		Page
	Executive Summary	1
	Abstract	2
I.	Introduction	3
II.	Status of the Duro-Test EELB Development at the Beginning of the Subcontract (December 1980)	5
III.	Status of the Duro-Test EELB Development at the end of the Subcontract (November 1981)	9
	A. Heat Mirror Coating	9
	B. Envelope	10
	C. Assembly Process	11
	D. Filament Design	11
	E. Data of Delivered Prototype Lamps	12
IV.	Conclusions and Future Development	13
V.	Publications	13

ENERGY EFFICIENT INCANDESCENT LAMP

Final Report on DOE-LBL Subcontract 4 506 010

16 December 1980 to 30 November 1981

ABSTRACT

The status of the Duro-Test EELB-development at the beginning of the subcontract was characterized by a newly introduced lamp construction based on an optimum optical quality envelope consisting of two hemispheres or hemi-ellipsoids bonded together.

During the contract period, considerable progress was made concerning the output of the continuous process heat mirror coating machine, the reproducibility of the film characteristics, and the durability of the coating over long periods of lamp operation. The bonding assembly processes were improved to the point where they are suitable for full mechanization and high speed production. A new concept for dimensioning the required compact and mechanically stable filaments was introduced by using diodes in series that reduce the effective operating voltage to 83 volts. This has led to filament designs of greater stability and greater compactness than any obtained before.

The efficacy and energy saving data of the prototype lamps delivered at the end of the subcontract were close to the target values established at the beginning.

ENERGY EFFICIENT INCANDESCENT LAMP

Final Report on DOE-LBL Subcontract 4 506 010

EXECUTIVE SUMMARY

The subcontract established sponsorship of and participation in Duro-Test Corporation's "Energy Efficient Light Bulb" program by the United States Department of Energy through the University of California, Lawrence Berkeley Laboratories, on the basis of partial financial support.

The Duro-Test energy efficient light bulbs are incandescent filament lamps for general lighting service that conserve energy through recycling a large part of their normally wasted infrared radiation by means of an infrared-reflecting transparent coating on the glass envelope. They have doubled luminous efficacy, corresponding to 50% energy saving, when compared to incandescent lamps of conventional construction with the same life rating.

At the end of the subcontract period, representative prototypes of the Duro-Test energy efficient incandescent lamp were delivered to the LBL contract manager. These lamps were constructed, according to performance targets established at the beginning, for initial light output of approximately 1500 lumens and nominal energy consumption of 50 watts. Fifteen hundred (1500) lumens is the approximate light output of a widely used 100 watt regular incandescent lamp with 2500 hour life rating. The prototype lamps had an average efficacy of 29 lumens per watt at 115 volts rated voltage. This compared favorably with the target value of 29.8 lumens per watt, which is equivalent to 50% energy saving for 2500 hours rated lamp life.

The design and the production method established for the Duro-Test energy efficient light bulb can be applied to lamp types with a wide range of lumen outputs and wattages at similarly high levels of efficacy and energy saving. The final report to the subcontract and the regularly submitted monthly progress reports show that, after considerable further development work and substantial investment, the production cost of the Duro-Test energy efficient incandescent lamp can be compatible with the requirement of $0.50 per 1000 hours life, as stipulated by DOE-LBL in Appendix A to RFP No. 4 502 710 of 17 September 1979.

FINAL REPORT

on DOE-LBL Subcontract 4 506 010

16 December 1980 to 30 November 1981

I. INTRODUCTION

The purpose of the subcontract was to establish sponsorship of and participation in Duro-Test's incandescent energy efficient lamp program by the United States Department of Energy through the University of California, Lawrence Berkeley Laboratories, on the basis of partial financial support.

This program had been initiated by Duro-Test Corporation in 1977. Prior to that, in 1973, Duro-Test had introduced a new line of WATTSAVER(R) incandescent lamps which conserved 10% energy with no loss in light compared to ordinary incandescent lamps of the same life, and this lamp line has since been adopted by the U. S. lamp industry. Worldwide, however, the lamp industry had directed most of its attention to improving the efficacy of gas discharge lamps. More recently efforts have been directed toward adaptation of existing gas discharge sources and principles for use in ordinary incandescent lamp sockets in order to save energy.

Duro-Test Corporation had become interested in the alternate route to reduction of the energy consumed by incandescent lamps, which leads via a direct substantial improvement of their efficacy. Theoretical and experimental work had shown that incandescent lamps with a new version of infrared-reflecting transparent coating on the envelope can have doubled luminous efficacy without life reduction. Such efficacy increase corresponds to an energy saving of 50%. It has been pointed out that even such remarkable efficacy improvement of incandescent lamps can only moderately improve their optical efficiency and that "compact" gas discharge lamps will save more energy than the best "Energy Efficient Incandescent Lamp". According to other opinions, the incandescent lamp has so many principally favorable characteristics that intensive efforts to develop it to optimum efficacy are definitely worthwhile. Such favorable properties of incandescent lamps are: the simple method of operation and handling, the pleasant and familiar light color, the color rendering and the relatively

low price; also their freedom from environmental contamination with toxic chemicals, such as mercury, and with EMR (electromagnetic radiation).

The subcontract began on 16 December 1980 and ended on 30 November 1981. It required the performance of the following tasks:

I. Submission of a Program Plan.
II. Delivery of a report on "Development Status of the Duro-Test EELB at the Subcontract Starting Date" and on "Design and Performance Targets Established for the Duro-Test EELB".
III. Providing a "Description of Recommended Testing Procedures and Equipment".
IV. Delivery of ten prototypes of the Duro-Test EELB representing the development status at the conclusion of the subcontract period, together with the initial test results obtained by the subcontractor with the prototype lamps.
V. Submission of ten Monthly Progress Reports detailing the results obtained for the development subtasks established by the Program Plan at the beginning of the subcontract.

All these tasks were fulfilled with the delivery of ten prototype lamps to the LBL Contract Manager on 26 January 1982. Corresponding to the "Design and Performance Targets" established for the Duro-Test EELB at the beginning of the subcontract, these lamps were constructed for a rated light output of approximately 1500 lumens and a nominal energy consumption of 50 watts. The initial data delivered with the prototype lamps showed an average of 29 lumens per watt at 115 volts rated voltage. This compared favorably with the target value of 29.8 lumens per watt, which is equivalent to 50% energy saving for 2500 hours rated lamp life.

A list of publications and issued patents concerning the Duro-Test EELB is provided at the end of this report.

II. STATUS OF THE DURO-TEST EELB-DEVELOPMENT AT THE BEGINNING OF THE SUB-CONTRACT (December 1980)

Theoretical and experimental results obtained during the period 1979/1980 (references 1-6) had suggested that in lamps designed for about 1500 lumens light output the obtainable energy savings should be about 50%. Fifteen hundred (1500) lumens is the approximate light output of a widely used 100 watt regular incandescent lamp with 2500 hour life rating.

Figure No. 1 illustrates the approximate energy flow in a 1500 lumen heat mirror lamp by means of a schematic diagram. In Table No. 1 the energy flow data are compared to the corresponding data of a regular incandescent lamp of comparable construction designed for equal light output and rated life. The resulting energy saving amounts to 53%.* These data are based on the theoretically best results obtainable with the presently developed technology for an internal TiO_2-Ag-TiO_2 heat mirror and assume a spherical envelope of best optical accuracy.

The energy saving could be increased through further improvement of the heat mirror data or the development of a different type of heat mirror with more favorable reflection/transmission characteristics. Additional improvements are theoretically possible through modifying the precise contour of the envelope.

---

* In Figure No. 1 the amount of infrared energy recycled between filament and heat mirror is approximately equal to the infrared energy normally lost in conventional lamps minus the much smaller infrared energy unavoidably lost in the heat mirror lamp. This follows from the fact that the filament in the heat mirror lamp is dimensioned to operate at the same average temperature as the filament of the regular lamp because both lamps generate the same lumen output for the same life rating. The value of 10.5 watts used in the figure for the visible wattage of the energy saving lamp is computed as if the visible spectrum of the energy saving lamp is the same as for a clear lamp. In fact the visible spectrum of the energy saving lamp is more luminous than the clear lamp. The value of visible wattage in the energy saving lamp evaluated over the same range of visible wavelengths as for a clear lamp is 9.7.

FIGURE NO. 1

(To Final Report on DOE-LBL Subcontract 4 506 010)

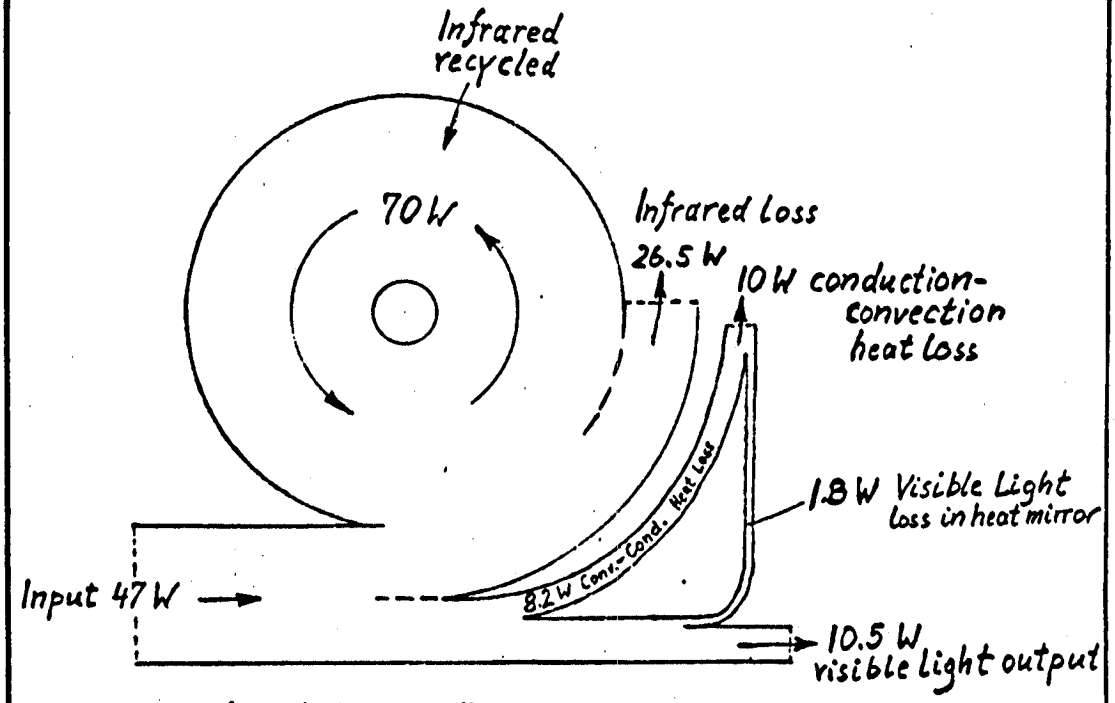

Approximate energy flow in energy efficient incandescent lamp with heat mirror envelopes designed for 1500 lumen light output at 2500 hours rated life.

TABLE NO. 1: Comparison of energy flows in heat mirror lamp and regular incandescent lamp designed for equal light output and rated life.

	Input	Infrared Radiation Loss	Heat Conduction-Convection Loss	Visible Light Lost in Heat Mirror	Visible Light Output
Heat Mirror Lamp	47W	26.5W	8.2W	1.8W	10.5W
Comparable Regular Lamp	100W	82.5W	7W	--	10.5W

Energy Saving: 53%

With the best available conventional glass envelopes the greatest energy savings obtainable from experimental lamps amounted to only 30%. It had been determined that the difference was mainly caused by insufficient quality of the envelopes with respect to accuracy of spherical or ellipsoidal contours and with respect to surface optical quality.

Therefore, a new lamp construction was introduced that is based on an optimum quality envelope consisting of two precisely manufactured parts (hemispheres or hemi-ellipsoids) bonded together. All other lamp parts and production processes were adapted to this concept. The decision to concentrate development on the two part precision envelope lamp was made only after obtaining competent cost estimates for the envelope parts. These showed that, after considerable development work and substantial investment, their cost should be compatible with the final lamp production cost of $0.50 per 1000 hours life as stipulated by DOE-LBL in Appendix A to RFP No. 4 502 710 of 17 September 1979.

Figure 2 shows lamp design and assembly method as they were mainly pursued during the subcontract period and as they were used for the delivered prototype lamps. Figure 3 shows an alternate construction which may have advantages over that of Figure 2. It is based on only two envelope parts manufactured by a precisely controlled forming process, which leads to parts with the required accuracy of contour and surface quality without the conventional processes of grinding and polishing.

Both lamp designs are based on bonding the three or two lamp parts together vacuum tight by means of a high temperature epoxy adhesive that was found impermeable to diffusion of water and oxygen. Many lamps assembled with this

bonding process have been operated through the required lamp life without developing any leaks.

At first consideration, the development of lamps with envelopes formed from several parts that are bonded together may appear unconventional. However, in fact similar methods of assembly are common for widely used lamps with internal reflector which require a relatively high degree of accuracy for the positioning of the filament relative to the reflector. Such lamps are the so-called PAR-type reflector lamps and the diversified lines of "sealed beam" automobile headlamps.

The developmental lamp design as shown by Figure No. 2 does not use a conventional screw base as external connecting element. Instead the outer parts of the relatively stiff lead-in wires are directly used as connecting elements by fastening two simple contact pins of brass or aluminum over them. In order to make the lamps usable in standard medium screw sockets a specially designed simple adapter, as shown by Figure No. 4, is provided.

It is believed that the incandescent EELB could be brought to market with the presently used simple connecting pins to be plugged into an adapter which the user would only have to buy once. The presence of the adapter in the user's socket would remind him dramatically of the type of replacement to buy when his first EELB burned out.

Figure 4 shows the appearance of a Duro-Test EELB equipped with conventional type medium size screw base modified to meet the special dimensional requirements of the precision envelope lamp. This construction could be used if the design with adapter should prove to have disadvantages.

The process of applying the three layer TiO_2-Ag-TiO_2 <u>heat mirror coating</u> to the glass envelope had been substantially simplified through the adoption of the two-part envelope construction. The hemispheric envelope parts lend themselves much better to heat mirror coating on the inside than complete spherical or ellipsoidal bulbs. It had been determined that inside coated envelopes

offer several advantages over outside coated ones. Their reflection-transmission properties are better and no deterioration through outside atmospheric influence or handling has to be considered.

Advanced, continuous process coating equipment had become operational during August 1980. It was originally intended for outside coating of completed envelopes but allowed a relatively simple conversion to inside coating of hemispheric or hemi-ellipsoidal envelope parts. During December 1980 a continuous coating process was established that allowed the application of the three-layer coating to the inside surface of a group of envelope parts within approximately 30 minutes. This compared with the coating time of more than six hours required for one hemispheric bulb part under the earlier used laboratory method based on RF-sputtering. The new accelerated process is based on reactive sputtering for the TiO_2 films. Targets of titanium metal are used and the TiO_2 is formed within the sputtering plasma through the presence of a small concentration of oxygen. The plasma is energized by a dc power supply. It is likely that the coating time can be reduced further through increasing the power level, modifying the target configuration and other improvements.

During the subcontract period, the priority goals of the coating development activity were:

Improvement of the TiO_2-Ag-TiO_2 film and its application process with respect to spectral properties, reproducibility, temperature resistance, and maintenance of these characteristics over the required lamp life.

III. STATUS OF THE DURO-TEST EELB DEVELOPMENT AT THE END OF THE SUBCONTRACT (November 1981)

A. HEAT MIRROR COATING

A substantial part of the time and labor expended during the subcontract period for heat mirror application was devoted to studying the characteristics and failure modes of the rather intricate continuous process coating equipment with its associated control apparatus. It was finally possible to

increase the output of the coating machine to satisfactory numbers of envelope hemispheres per time unit. Also, relatively good reproducibility of the optical film characteristics was achieved through uninterrupted machine operation over longer periods. During the last months of the subcontract period, the lamps made from the coated glass hemispheres showed net energy savings between 42 and 48%. These values correspond to efficacies between 27.5 and 29.2 lumens per watt (target efficacy: 29.8 ± 3.6 LPW).

Considerable progress was also made concerning deterioration of the optical film characteristics during longer periods of lamp operation. This was observed frequently but not exclusively on envelope surface areas at higher temperature. A major development was the discovery that the coating degradation may not be caused by deficiencies in the structure of the film itself but by inadequate substrate preparation. While great emphasis had always been given to cleaning the surface of the envelope parts, a newly instituted entirely different cleaning procedure resulted in nearly complete elimination of film degradation.

B. ENVELOPE

When the decision was made to concentrate the incandescent EELB development on the two part precision envelope design, an agreement had been obtained with an established manufacturer of optical precision parts on supplying the required hemispheric or hemi-ellipsoidal parts according to well defined specifications. This agreement included the development of volume production methods and machinery and the delivery of gradually increasing numbers of envelope parts.

The cooperation with the supplier of precision glass parts has been largely satisfactory during the subcontract period. Up to July 1981, all delivered parts were subjected to 100% quality control for dimensions and surface quality. From this time on, the detailed quality control measurements were reduced to sample tests because these were deemed sufficient.

For the alternate lamp construction, shown in Figure 3, which is based on envelope parts manufactured by a precisely controlled direct forming process without grinding or polishing, a cooperative development effort was started with another major glass manufacturer. This project involves substantial equipment construction, has made satisfactory progress, but has not yet led to conclusive results.

C. ASSEMBLY PROCESS

Gradually, suitable fixtures and curing methods for the bonding process with high temperature epoxy adhesive were developed, which have led to very satisfactory lamp assembly results. Very few lamp failures are encountered that can be traced to leaking seals even after long operation or storage. As extensive experience with the bonding assembly method has been obtained, excellent evidence has been accumulated that the process should lend itself well to full mechanization and high speed production.

D. FILAMENT DESIGN

As the performance of the experimental EELB's according to the design of Figure 2 improved and long hours of operation were obtained, it became apparent that the used compact coiled coil filament construction was unsatisfactory. Early failures occurred frequently due to irregular recrystallization and deformation of the secondary windings caused by their relatively large diameter relative to the wire cross section.

Therefore, a new concept for dimensioning the filament for incandescent EELBs was introduced. This consists of operating the filament with pulsed D.C. instead of A.C.; the pulsed D.C. is created by a rectifying power diode in series with the filament. Suitable diodes for this purpose are readily available with very small dimensions and sufficiently low cost that their general addition to Duro-Test EELBs does not represent an undue complication or cost increase. The wattage loss in the diode can be considered as negligible in view of the advantages obtained. In the wattage range of the presently developed 50W EELB, the diode losses amount to only approximately 0.7 watt.

The essential advantage of the pulsed D.C. operation for the EELB filament is that it can be designed for a voltage approximately 30% lower than the lamp supply voltage, for example for 82V instead of 120V. At a given wattage, a 82V-filament can be made substantially more compact and more stable than a 120V-filament. In the EELB, a more compact filament leads to reduced optical aberration losses and it can be secured more easily in its accurately focused position; it has greater stability because of its 40% greater wire cross section.

Accordingly, a filament design for operation at 82 volts RMS and 50 watt input in the EELB was obtained. It operates with correct data in the EELB and shows greater stability with greater compactness than any filament used before. Therefore, it was decided to equip the prototype lamps to be delivered under the subcontract with this new diode-operated filament type. The diode required for proper lamp operation is arranged within the adapter supplied with every lamp. Consequently, the Duro-Test prototype incandescent EELBs cannot be operated without their adapter.

E. DATA OF DELIVERED PROTOTYPE LAMPS

The ten delivered prototype lamps had the following average data at their rated voltage of 115V after suitable seasoning:

Wattage	52.2 ± 1.1 Watt
Initial lumens	1512 ± 120
Initial luminous efficacy	29.0 ± 2.5 LPW

These data correspond favorably with the original performance targets in the report submitted on 16 February 1981:

Wattage	50 ± 3 watt
Initial lumens	1490 ± 90
Initial luminous efficacy	29.3 ± 3.6 LPW

IV. CONCLUSIONS AND FUTURE DEVELOPMENT

A main goal of the work under the Duro-Test EELB program during the subcontract period was the following: To develop an established lamp construction based on established processes and operating principles to the point where its suitability for an economically manufactured commercial product is determined. On the basis of the obtained results it is believed that this main goal has been reached. After the necessary further development of processes and production equipment, the Duro-Test EELB can make a substantial contribution to reducing the large amounts of energy still consumed and partially wasted by conventional incandescent lamps.

V. PUBLICATIONS

1. "Radiation Conserving Incandescent Lamps", J. Brett, R. Fontana, P. Walsh, S. Spura, L. J. Parascandola, W. Thouret and L. Thorington, transaction of the Illuminating Engineering Society of North America, Journal of the IESNA, Vol. IX, p. 197, July 1980.

2. "A Sputtered Boost for Lamp Efficiency", S. Spura, R. Fontana, S. Hurwitt, A. Aronson, J. Brett, P. Walsh, W. Thouret and L. Thorington, Optical Spectra, Vol. XIV, p. 57, March 1980.

3. "Development of Energy Conserving Incandescent Lamps", J. Brett, R. Fontana, P. Walsh, S. Spura, L. Parascandola, W. Thouret, L. Thorington, Journal of IES of North America, Vol. X, p. 214, July 1981.

4. "Filaments for Incandescent Lamps with Radiation Conserving Envelopes", J. Brett, R. Fontana, P. Walsh, W. Thouret, M. Gerber, R. Kaufman, L. Thorington, IEEE Transactions on Industry Applications, Vol. 1A-17, p. 210, March/April 1981.

5. "Technique for Sputtering Energy Conserving Coatings", S. Spura, R. Fontana, S. Hurwitt, A. Aronson, J. Brett, P. Walsh, W. Thouret and L. Thorington, Proceedings of the 23rd Annual Technical Conference, Society of Vacuum Coaters, Chicago, 20-22 May 1980.

6. "Energy Saving Incandescent Lamps with Infrared Reflecting Envelope", J. Brett, R. Fontana, P. Walsh, W. E. Thouret and L. Thorington, Proceedings of the Joint Technical Conference of the Illuminating Engineering Societies of Switzerland, the Netherlands, Austria and Germany, Berlin, Germany, 27-29 October 1980, Vol. I.

7. U. S. Patent 4,160,929 "Incandescent Lamp with Transparent Heat Mirror Reflector", issued 10 July 1979 to Duro-Test Corporation.

8. U. S. Patent 4,227,113 "Incandescent Electric Lamp with Partial Light Transmitting Coating", issued 7 October 1980 to Duro-Test Corporation.

9. U. S. Patent 4,249,101 "Incandescent Lamp with Infrared Reflecting Visible Energy Transmitting Coating and Misaligned Filament", issued 3 February 1981 to Duro-Test Corporation.

10. U. S. Patent 4,256,989 "Incandescent Lamp with Glass Button Stem and Socket Adapter", issued 17 March 1981 to Duro-Test Corporation.

11. U. S. Patent 4,275,327 "Incandescent Electric Lamp with Heat Recovery", issued 23 June 1981 to Duro-Test Corporation.

12. U. S. Patent 4,283,653 "High Emissivity Filament for Energy Conserving Incandescent Lamps with Infrared Radiation Returning Envelopes" issued 11 August 1981 to Duro-Test Corporation.

13. U. S. Patent 4,280,076 "Incandescent Lamp with Structure for Collecting Evaporated Filament Material" issued 21 July 1981 to Duro-Test Corporation.

14. U. S. Patent No. 4,295,873 "Method and Apparatus for Reworking a Hollow Workpiece" issued 20 October 1981 to Duro-Test Corporation.

DURO-TEST CORPORATION

Dr. W. E. Thouret

Director Engineering

Project Manager

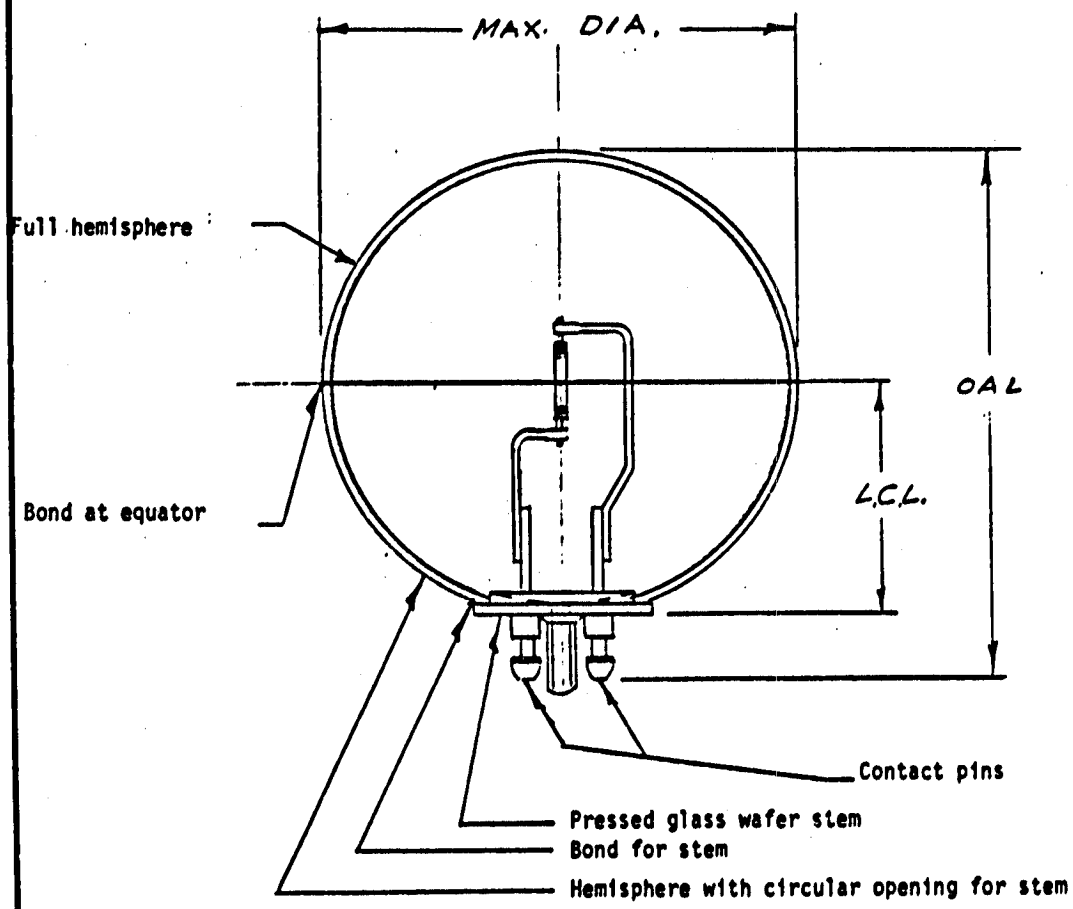

Figure No. 2: DESIGN OF DURO-TEST EELB

(To Final Report on DOE-LBL Subcontract
No. 4 506 010)

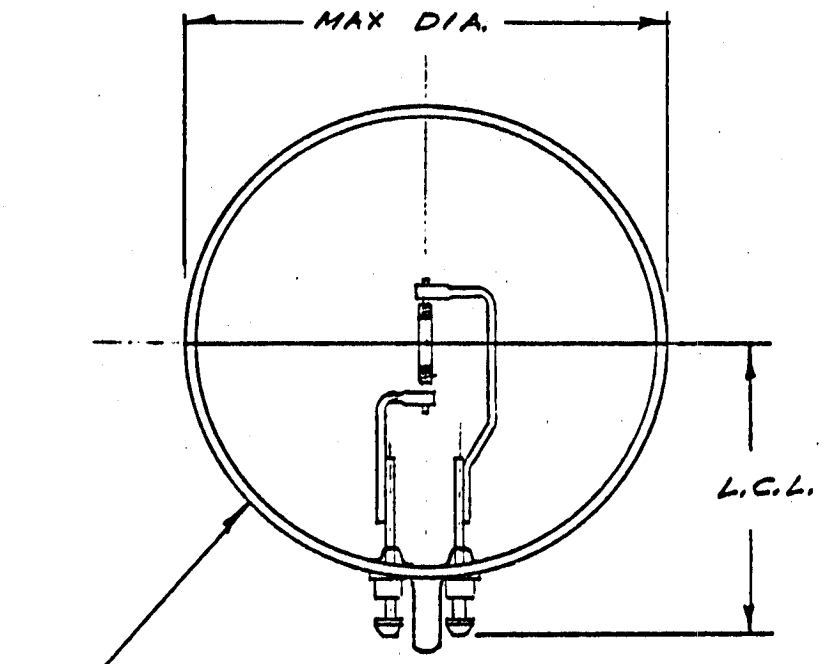

Hemisphere with lead wires sealed-in before coating and bonding at equator.

Figure No. 3: ALTERNATE DESIGN FOR DURO-TEST EELB

(To Final Report on DOE-LBL Subcontract
No. 4 506 010)

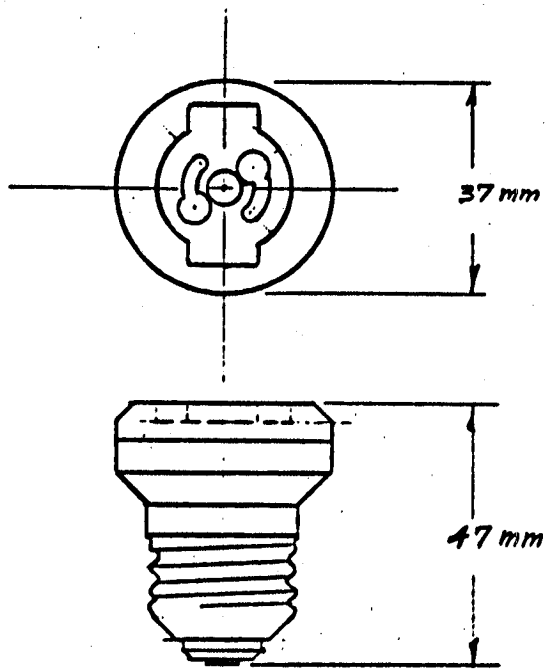

Figure No. 4 : SCREW-IN ADAPTER FOR DURO-TEST EELB

(To Final Report on DOE-LBL Subcontract
No. 4 506 010)

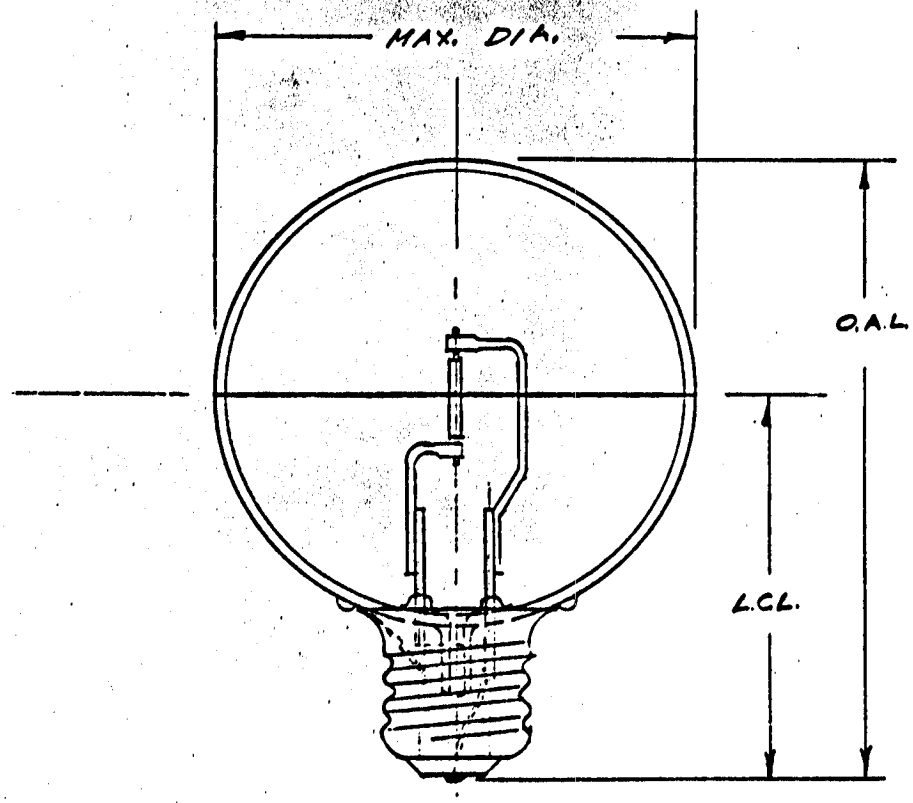

Figure No. 5: DURO-TEST EELB WITH STANDARD TYPE MEDIUM SCREW BASE

(To Final Report on DOE-LBL Subcontract No. 4 506 010)