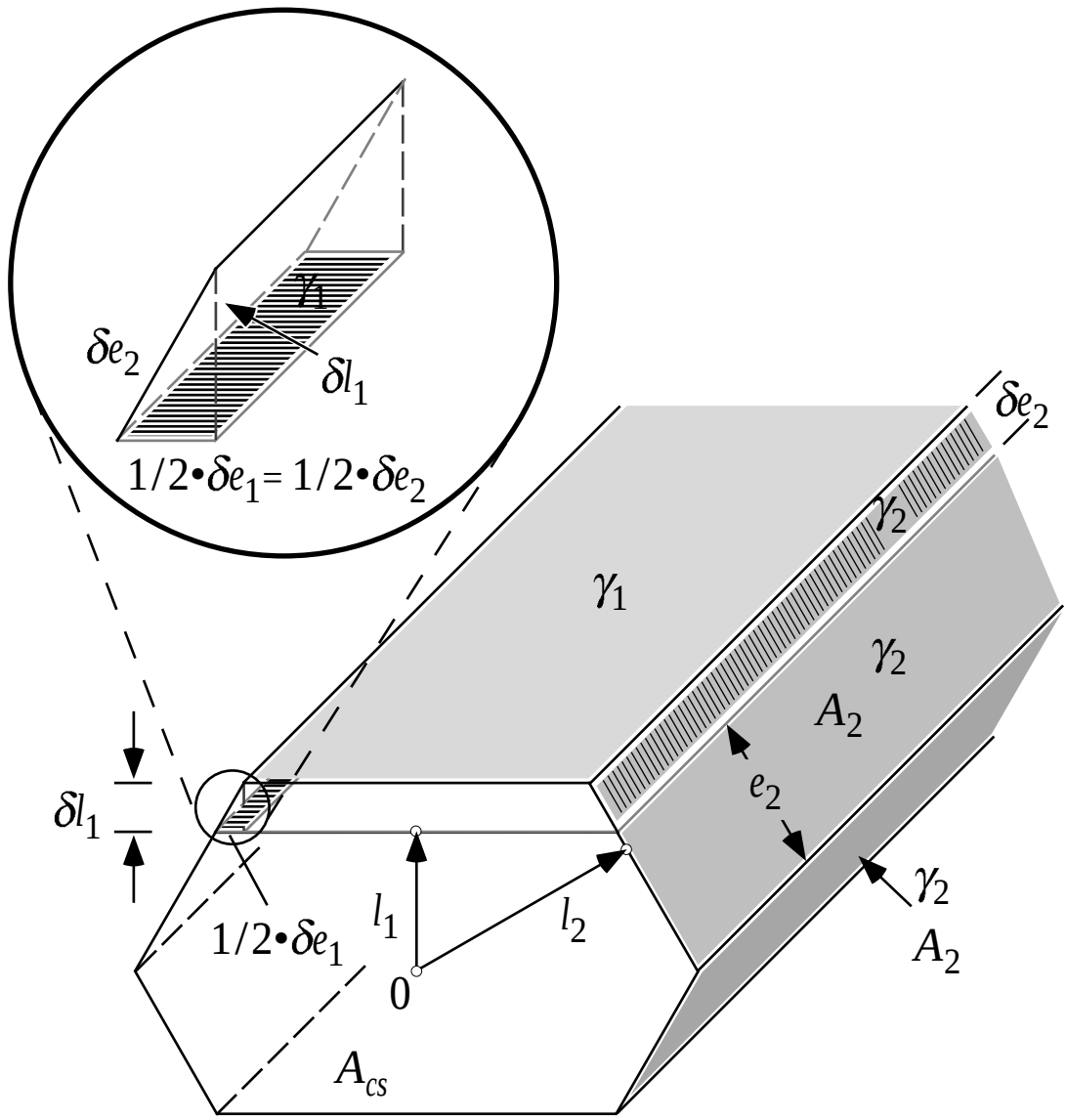

(a)

Figure 4a Illustration of the surface area and surface energy changes associated with the morphological evolution of a stretched hexagon. When the surface energy changes caused by the displacement of facet 1 are added and then divided by the volume swept, the *wmc* of facet 1 is determined.

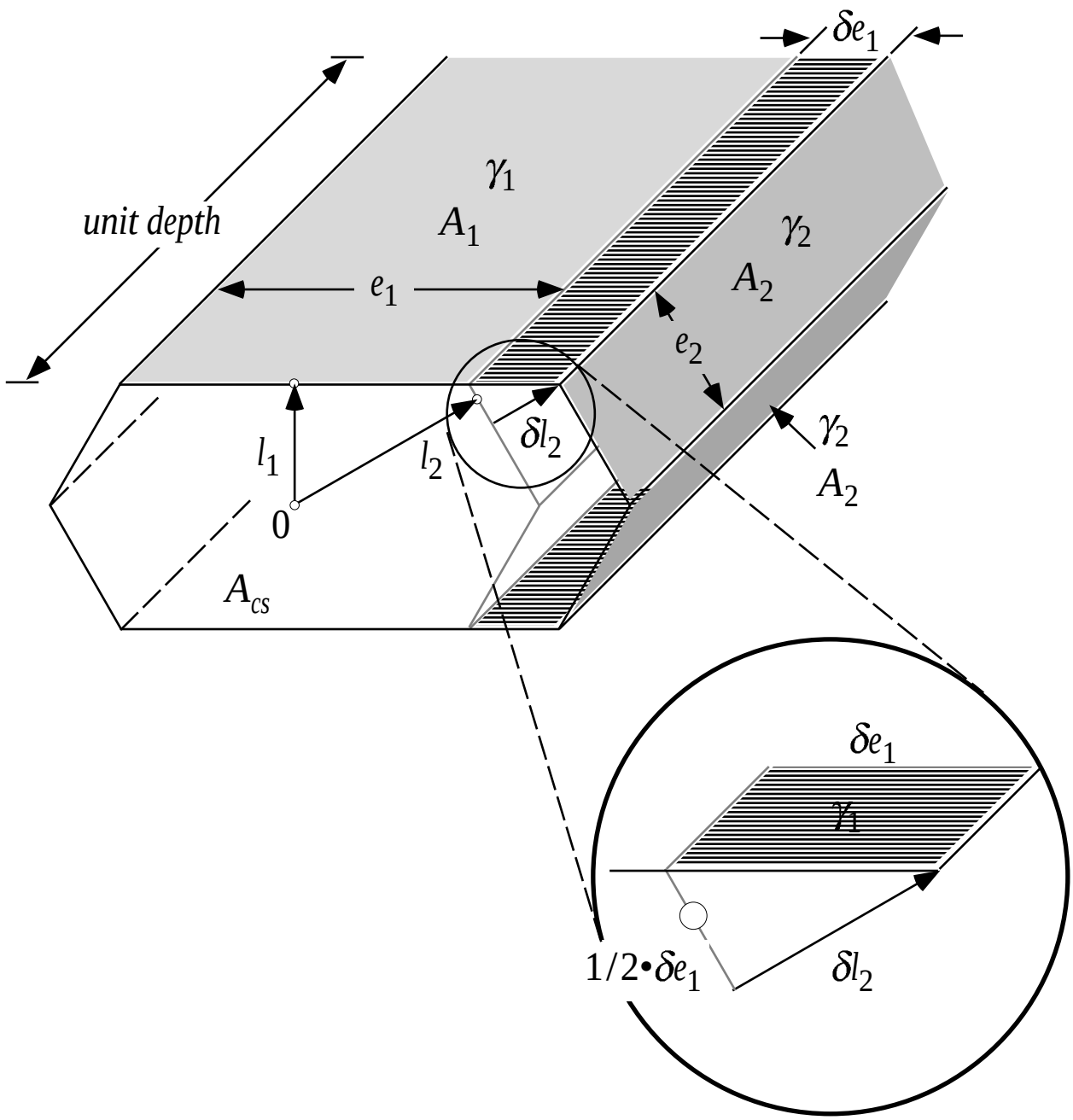

(b)

Figure 4b Illustration of the surface area and surface energy changes associated with the morphological evolution of a stretched hexagon. The *wmc* of facet 2 is determined to be γ_1/l_1.

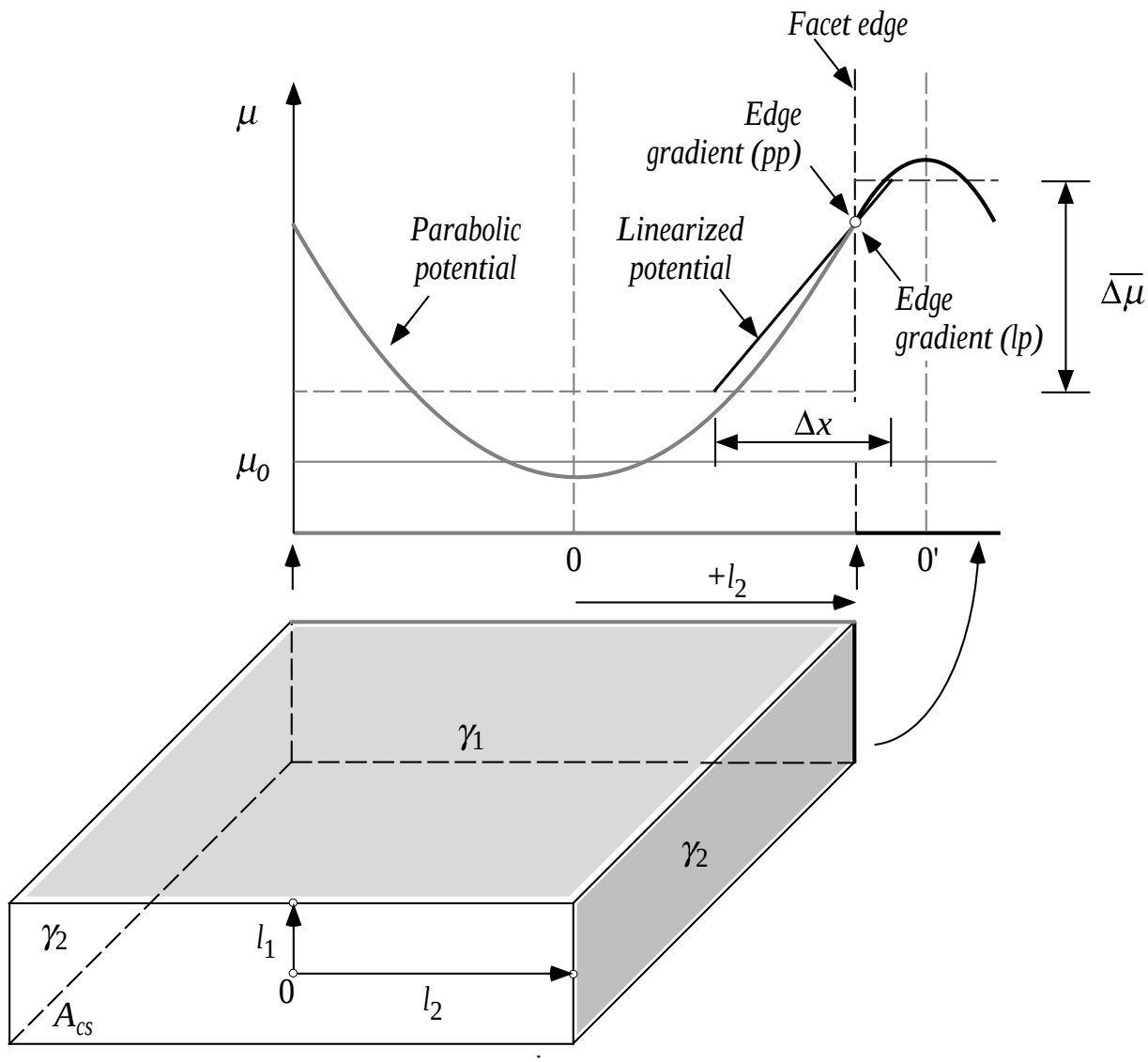

Figure 5 Comparison of the potential gradients at the edge of a stretched square when a parabolic potential (*pp*) is assumed, and when the mean chemical potential difference between adjacent facets is linearized (*lp*).

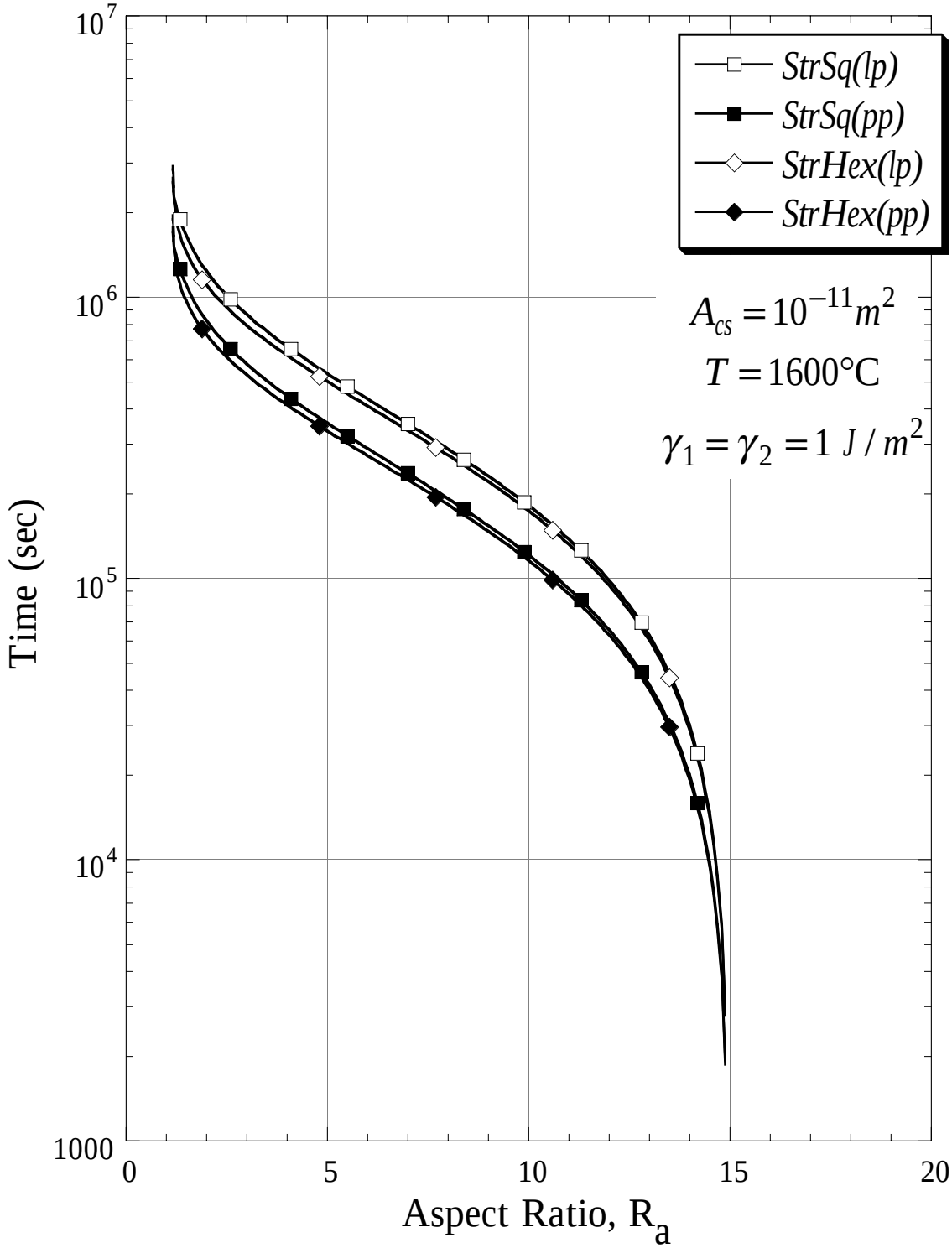

Figure 6 Comparison of the predicted time dependencies of the aspect ratio at 1600°C for stretched squares and stretched hexagons of fixed size.

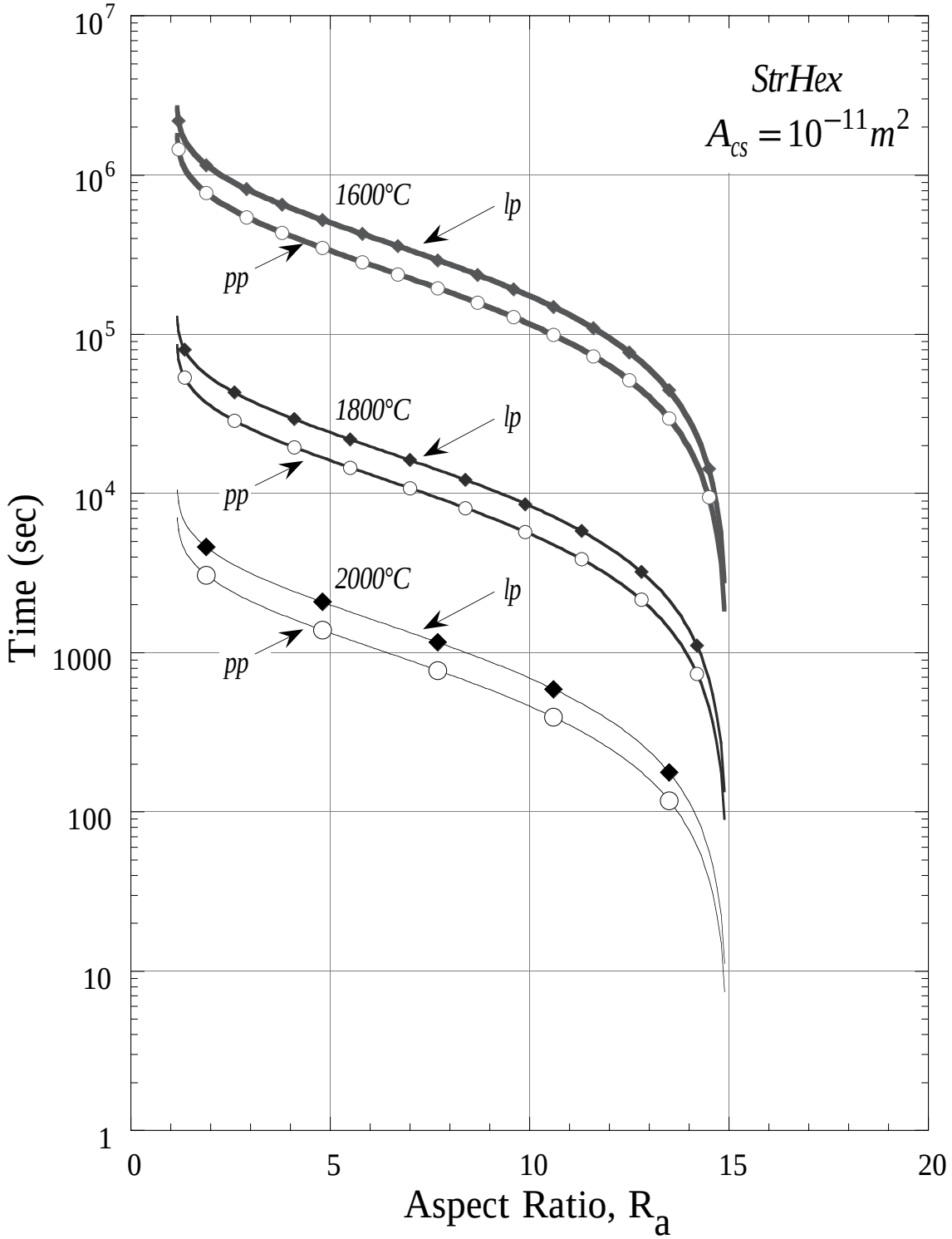

Figure 7 Plot of the predicted effect of temperature on the shape equilibration kinetics of a stretched hexagon.

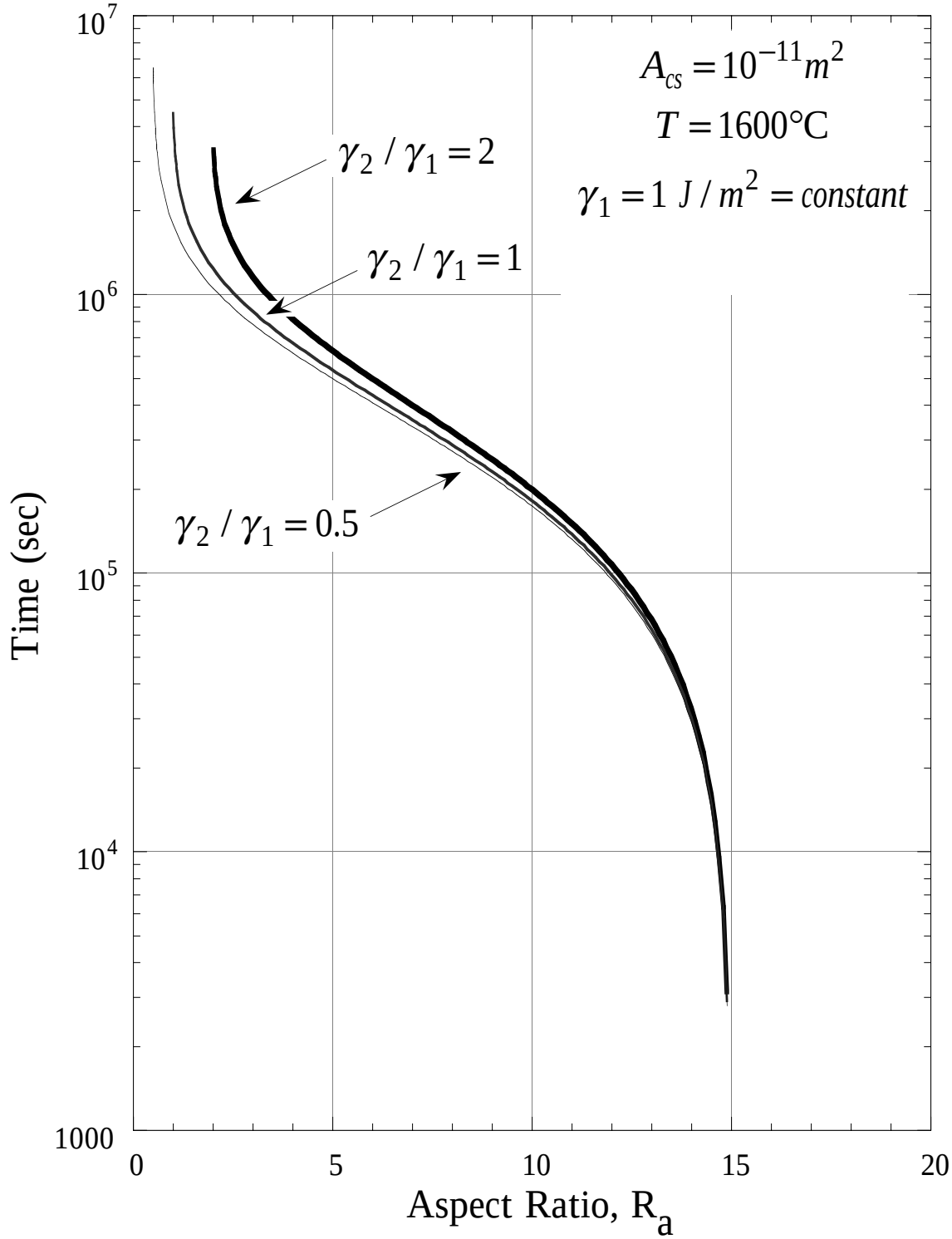

Figure 8 Predicted effect of surface energy anisotropy on the shape equilibration kinetics of a stretched square. In (a) γ_1 is held fixed at 1 J/m^2, and changes in R_{eq} are accommodated by changes in the value of γ_2.

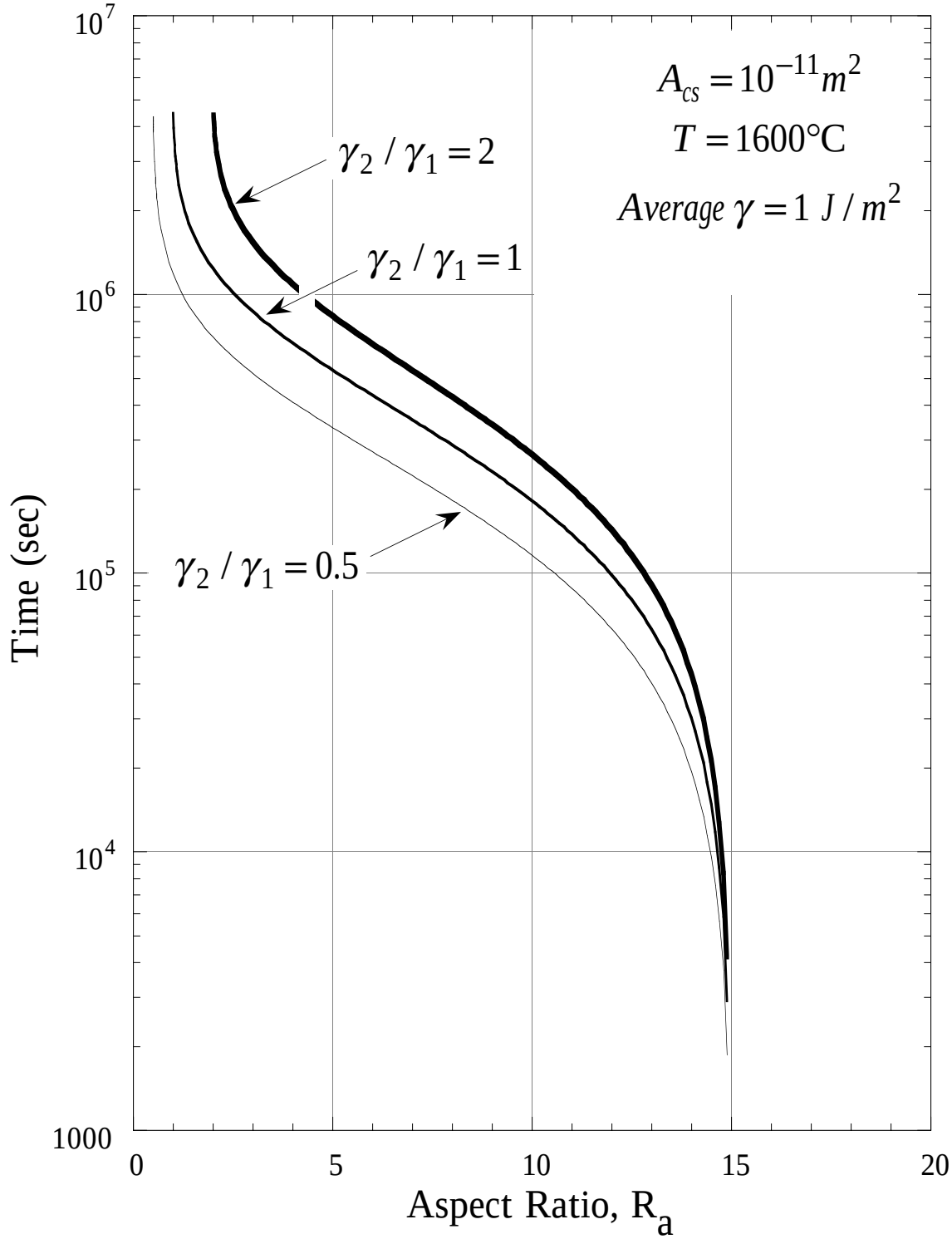

Figure 8 Predicted effect of surface energy anisotropy on the shape equilibration kinetics of a stretched square. In (b), the values of *both* γ_1 and γ_2 are adjusted to accommodate the change in R_{eq}, but the *average* surface energy of the equilibrium shape crystal is maintained constant at 1 J/m^2.

[1] W. W. Mullins, "Flattening of a Nearly Plane Solid Surface due to Capillarity," *J. Appl. Phys.*, 30, [1], 77-83 (1959).
[2] W. W. Mullins, "Theory of Thermal Grooving," *J. Appl. Phys.*, 28, [3], 333-39 (1957).
[3] G. C. Kuczynski, "Self-Diffusion in Sintering of Metallic Particles," *Trans. A. I. M. E.*, 185, [2], 169-78 (1949).
[4] W. D. Kingery and M. Berg, "Study of the Initial Stages of Sintering of Solids by Viscous Flow, Evaporation-Condensation, and Self-Diffusion," *J. Appl. Phys.*, 26, [10], 1205-12 (1955).
[5] R. L. Coble, "Sintering Crystalline Solids. I. Intermediate and Final State Diffusion Models," *J. Appl. Phys.*, 32, [5], 787-92 (1961).
[6] F. A. Nichols and W. W. Mullins, "Surface (Interface) and Volume-Diffusion Contributions to Morphological Changes Driven by Capillarity," *Trans. A.I.M.E.*, 233, [10], 1840-48 (1965).
[7] R. F. Sekerka and T. F. Marinis, "Dynamics of Morphological Change during Solid-Solid Transformations," in SOLID → SOLID PHASE TRANSFORMATIONS, H. I. Aaronson, D. E. Laughlin, R. F. Sekerka, and C. M. Wayman, Eds. New York: The Metallurgical Society of AIME, 1982, pp. 67-84.
[8] W. M. Robertson, "Grain Boundary Grooving by Surface Diffusion for Finite Surface Slopes," *J. Appl. Phys.*, 42, [1], 463-67 (1971).
[9] W. S. Coblenz, J. M. Dynys, R. M. Cannon, Jr., and R. L. Coble, "Initial Stage Solid-State Sintering Models: A Critical Analysis and Assessment," in Sintering Processes, G. C. Kuczynski, Ed. New York: Plenum Press, 1980.
[10] J.-H. Choy, S. A. Hackney, and J. K. Lee, "Nonlinear stability analysis of the diffusional spheroidization of rods," *J. Appl. Phys.*, 77, [11], 5647-54 (1995).
[11] G. Wulff, "Zur Frage der Geschwindigkeit des Wachstums und der Auflösung der Krystallflachen," *Z. Krist.*, 34, 449-530 (1901).
[12] C. Herring, "Surface Tension as a Motivation for Sintering," in The Physics of Powder Metallurgy, W. E. Kingston, Ed. New York: McGraw-Hill, 1951, pp. 143-79.
[13] A. D. Brailsford and N. A. Gjostein, "Influence of surface energy anisotropy on morphological changes occurring by surface diffusion," *J. Appl. Phys.*, 46, [6], 2390-97 (1975).
[14] H. P. Bonzel, E. Preuss, and B. Steffen, "Periodic Surface Profiles Under the Influence of Anisotropic Surface Energy: A Steady-State Solution," *Surface Science*, 145, [1], 20-32 (1984).
[15] H. P. Bonzel, E. Preuss, and B. Steffen, "The Dynamical Behavior of Periodic Surface Profiles on Metals Under the Influence of Anisotropic Surface Energy," *J. Appl. Phys. A (Solids and Surfaces)*, 35, [1], 1-8 (1984).
[16] U. Breuer and H. P. Bonzel, "Morphology of Periodic Surface Profiles on Au Single Crystals and the Anisotropy of the Surface Free Energy of Au," *Surface Science*, 273, [1], 219-36 (1992).
[17] S. Surnev, B. Voigtlander, H. P. Bonzel, and W. W. Mullins, "Anisotropic profile decay on perturbed Au(111) vicinal surfaces," *Surface Science*, 360, [1-3], 242-8 (1996).
[18] H. P. Bonzel and W. W. Mullins, "Smoothing of perturbed vicinal surfaces," *Surface Science*, 350, [1], 285-300 (1996).
[19] C. Duport, A. Chame, W. W. Mullins, and J. Villain, "Decay of Grooves Cut in a Surface with Singular Orientation when the Neighboring Orientations are Unstable," *Journal de Physique I (General Physics, Statistical Physics, Condensed Matter, Cross-Disciplinary Physics)*, 6, [8], 1095-1125 (1996).
[20] J. E. Taylor, "Overview No. 98 II – Mean Curvature and Weighted Mean Curvature," *Acta Metall. Mater.*, 40, [7], 1475-85 (1992).

[21] J. W. Cahn and J. E. Taylor, "Surface motion by surface diffusion," *Acta Metall. Mater.*, 42, [4], 1045-63 (1994).
[22] W. C. Carter, A. R. Roosen, J. W. Cahn, and J. E. Taylor, "Shape Evolution by Surface Diffusion and Surface Attachment Limited Kinetics on Completely Facetted Surfaces," *Acta Metall. Mater.*, 43, [12], 4309-4323 (1995).
[23] J. Rödel and A. M. Glaeser, "Microdesigned Interfaces: New Opportunities for Materials Science," *Yogyo Kyokai Shi*, 99, [4], 251-65 (1991).
[24] J. Rödel and A. M. Glaeser, "High-Temperature Healing of Lithographically Introduced Cracks in Sapphire," *J. Am. Ceram. Soc.*, 73, [3], 592-601 (1990).
[25] J. D. Powers and A. M. Glaeser, "High-Temperature Healing of Cracklike Flaws in Mg- and Ca-Ion-Implanted Sapphire," *J. Am. Ceram. Soc.*, 75, [9], 2547-58 (1992).
[26] J. D. Powers and A. M. Glaeser, "High-Temperature Healing of Cracklike Flaws in Titanium Ion-Implanted Sapphire," *J. Am. Ceram. Soc.*, 76, [9], 2225-34 (1993).
[27] L. Kulinsky, J. D. Powers, and A. M. Glaeser, "Morphological Evolution of Pre-perturbed Pore Channels in Sapphire," *Acta Mater.*, 44, [10], 4115-30 (1996).
[28] J. S. Stölken and A. M. Glaeser, "The Morphological Evolution of Cylindrical Rods with Anisotropic Surface Free Energy via Surface Diffusion," *Scripta Metall. et Mater.*, 27, [4], 449-54 (1992).
[29] A. M. Glaeser, "A New Approach to Investigating Surface Transport in Ceramics," in Mass and Charge Transport in Ceramics, vol. 71, *Ceramic Transactions*, K. Koumoto, L. M. Sheppard, and H. Matsubara, Eds. Westerville: The American Ceramic Society, 1996, pp. 117-36.
[30] J. Rödel and A. M. Glaeser, "Pore Drag and Pore-Boundary Separation in Alumina," *J. Am. Ceram. Soc.*, 73, [11], 3302-12 (1990).
[31] J. Rödel and A. M. Glaeser, "Anisotropy of Grain Growth in Alumina," *J. Am. Ceram. Soc*, 73, [11], 3292-301 (1990).
[32] J. D. Powers and A. M. Glaeser, "Titanium Effects on Sintering and Grain Boundary Mobility of Alumina," *Ceram. Eng. Sci. Proc.*, 18, [4], 617-23 (1997).
[33] J. Rödel and A. M. Glaeser, "A Technique for Investigating the Elimination and Coarsening of Model Pore Arrays," *Mater. Lett.*, 6, [10], 351-55 (1988).
[34] J. Choi, D. Kim, B. J. Hockey, S. M. Wiederhorn, C. A. Handwerker, J. E. Blendell, W. C. Carter, and A. R. Roosen, "The Equilibrium Shape of Internal Cavities in Sapphire," *J. Am. Ceram. Soc.*, 80, [1], 62-68 (1997).
[35] R. Kern, "The Equilibrium Form of a Crystal," in Morphology of Crystals, Part A: Fundamentals, I. Sunagawa, Ed. Tokyo: Terra Scientific Publishing Co., 1987, pp. 92-98.
[36] R. S. Nelson, D. J. Mazey, and R. S. Barnes, "The Thermal Equilibrium Shape and Size of Holes of Solids," *Phil. Mag.*, 11, 91-111 (1965).
[37] M. Kitayama and A. M. Glaeser, "The Energetics and Kinetics of Pore Shape Evolution in Alumina," *Key Eng. Mater.*, 159-160, 193-204 (1999).
[38] M. Kitayama and A. M. Glaeser, "The Kinetics of Pore Shape Evolution in Alumina," *J. Mater. Synth. Proc.*, 6, [3], 161-7 (1998).
[39] M. Kitayama, T. Narushima, and A. M. Glaeser, "The Wulff Shape of Alumina: II. Experimental Measurement of Pore Shape Evolution," *J. Am. Ceram. Soc.*, (1999).
[40] M. Kitayama and A. M. Glaeser, "The Wulff Shape of Alumina: III. Undoped Alumina," , (in preparation).
[41] M. Kitayama and A. M. Glaeser, "The Wulff Shape of Alumina: IV. Ti(IV)-Doped Alumina," , (in preparation).

[42] M. Kitayama and A. M. Glaeser, "The Wulff Shape of Alumina: V. Mg, Ca, and Ti(III)-doped Alumina," , (in preparation).
[43] C. H. P. Lupis, Chemical Thermodynamics of Materials. New York: North-Holland, 1983.
[44] S. H. Yu and S. A. Hackney, "On the shape change of a nonequilibrium faceted microcrystal," *Scripta Metall. Mater.*, 24, [11], 2077-82 (1990).
[45] M. Kitayama, "The Wulff Shape of Doped and Undoped Sapphire," Ph.D., Department of Materials Science and Mineral Engineering, University of California, Berkeley, , (1996).
[46] C. Herring, "Effect of Change of Scale on Sintering Phenomena," *J. Appl. Phys.*, 21, [4], 301-03 (1950).
[47] S. J. Bennison and M. P. Harmer, "Effect of Magnesia Solute on Surface Diffusion in Sapphire and the Role of Magnesia in the Sintering of Alumina," *J. Am. Ceram. Soc.*, 73, [4], 833-37 (1990).
[48] W. W. Mullins and G. S. Rohrer, "Nucleation Barrier for Volume-Conserving Shape Changes of Faceted Crystals," *unpublished research*, (1999).
[49] B. E. Sundquist, "A Direct Determination of the Anisotropy of the Surface Free Energy of Solid, Silver, Copper, Nickel, and Alpha and Gamma Iron," *Acta Metall.*, 12, [1], 67-86 (1964).
[50] W. L. Winterbottom and N. A. Gjostein, "Determination of the Anisotropy of Surface Energy of Metals-II: Experimental γ-Plot of Gold," *Acta Metall.*, 14, [9], 1041-52 (1966).
[51] M. McLean, "Determination of the Surface Energy of Copper as a Function of Crystallographic Orientation and Temperature," *Acta Metall.*, 19, [4], 387-93 (1971).
[52] J. C. Heyraud and J. J. Métois, "Equilibrium Shape and Temperature; Lead on Graphite," *Surface Science*, 128, [1], 334-42 (1983).
[53] W. K. Burton, N. Cabrera, and F. C. Frank, "The Growth of Crystals and the Equilibrium Structure of Their Surfaces," *Philosophical Transactions of the Royal Society of London*, 243, [866], 299-358 (1951).
[54] M. Ozdemir and A. Zangwill, "Morphological equilibration of a facetted crystal," *Physical Review B (Condensed Matter)*, 45, [7], 3718-29 (1992).
[55] J. W. Bullard and A. W. Searcy, "Equilibria and kinetics of mass transport between crystal facets: a comparison of two models," *Acta Mater.*, 47, [10], 3057-61 (1999).