Fig. 1

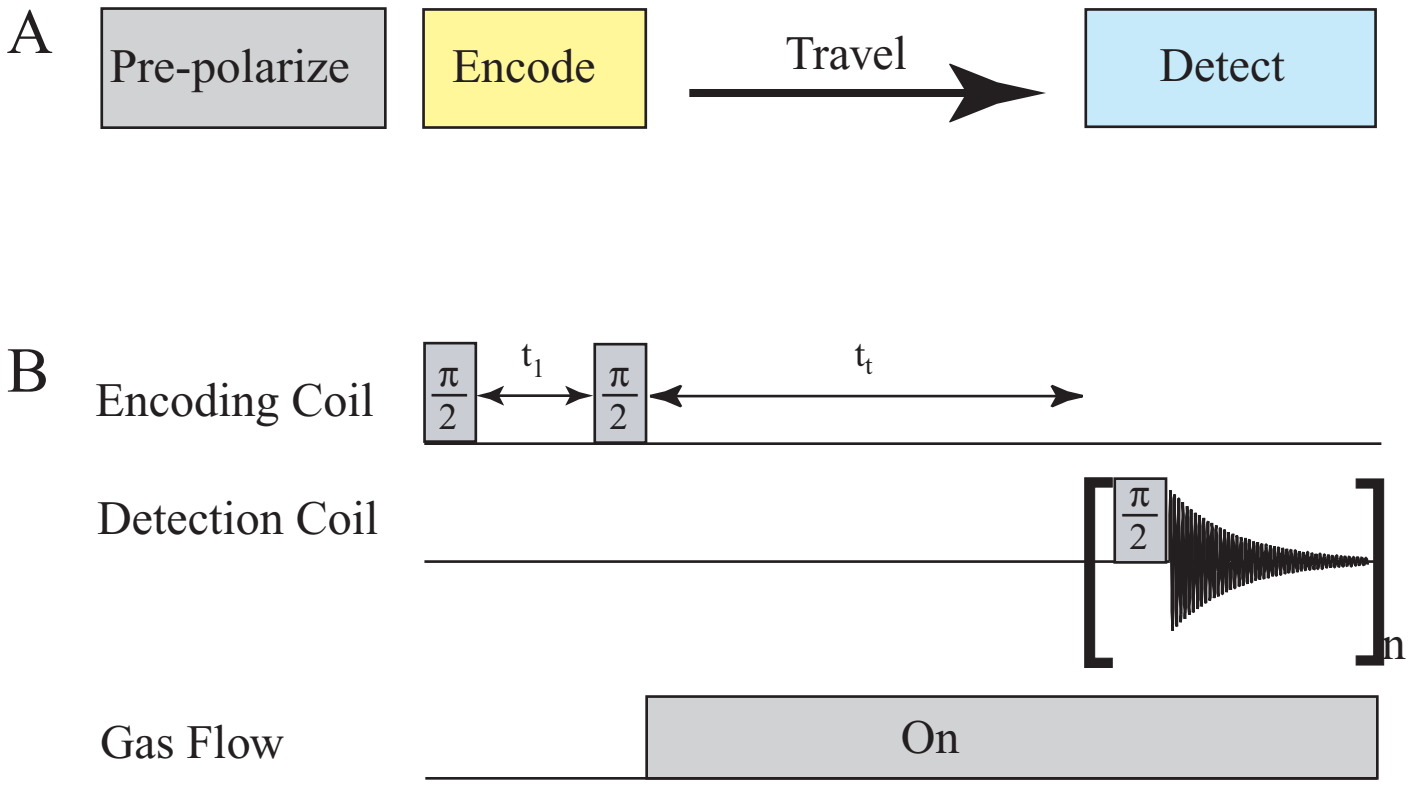
A
Pre-polarize
Encode
Travel
Detect
B
Encoding Coil
π/2
t1
π/2
tt
Detection Coil
π/2
n
Gas Flow
On