LBNL-53605

Duct Leakage Impacts on VAV System Performance in California Large Commercial Buildings

Craig P. Wray and Nance E. Matson

Environmental Energy Technologies Division
Indoor Environment Department
Lawrence Berkeley National Laboratory
Berkeley, CA 94720

October 2003

This report describes work supported by the California Energy Commission through the Public Interest Energy Research program under contract no. 400-99-012-1, and by the Assistant Secretary for Energy Efficiency and Renewable Energy, Building Technologies Program, U.S. Department of Energy under contract no. DE-AC03-76SF00098.

The Lawrence Berkeley National Laboratory, 1 Cyclotron Road, Berkeley, CA 94720 is a national laboratory of the U.S. Department of Energy managed by the Regents of the University of California for the U.S. Department of Energy under Contract Number DE-AC03-76SF00098. This report was prepared as a result of work sponsored by the California Energy Commission (Commission). It does not necessarily represent the views of the Commission, its employees, or the State of California. The Commission, the State of California, its employees, contractors, and subcontractors make no warranty, express or implied, and assume no legal liability for the information in this report, nor does any party represent that the use of this information will not infringe upon privately owned rights. This report has not been approved or disapproved by the Commission nor has the Commission passed upon the accuracy or adequacy of the information in this report.

THE GOVERNMENT AND THE CONTRACTOR MAKE NO EXPRESS OR IMPLIED WARRANTY AS TO THE CONDITIONS OF THE RESEARCH OR ANY INTELLECTUAL PROPERTY, GENERATED INFORMATION, OR PRODUCT MADE OR DEVELOPED UNDER THIS AGREEMENT, OR THE OWNERSHIP, MERCHANTABILITY, OR FITNESS FOR A PARTICULAR PURPOSE OF THE RESEARCH OR RESULTING PRODUCT; THAT THE GOODS, SERVICES, MATERIALS, PRODUCTS, PROCESSES, INFORMATION, OR DATA TO BE FURNISHED HEREUNDER WILL ACCOMPLISH INTENDED RESULTS OR ARE SAFE FOR ANY PURPOSE INCLUDING THE INTENDED PURPOSE; OR THAT ANY OF THE ABOVE WILL NOT INTERFERE WITH PRIVATELY OWNED RIGHTS OF OTHERS. NEITHER THE GOVERNMENT NOR THE CONTRACTOR SHALL BE LIABLE FOR SPECIAL, CONSEQUENTIAL, OR INCIDENTAL DAMAGES ATTRIBUTED TO SUCH RESEARCH OR RESULTING PRODUCT, INTELLECTUAL PROPERTY, GENERATED INFORMATION, OR PRODUCT MADE OR DELIVERED UNDER THIS AGREEMENT.

ACKNOWLEDGEMENTS

The largest debt of gratitude goes to former and current Energy Performance of Buildings staff members: Ellen Franconi (Nexant Corporation) for her development of the DOE-2/TRNSYS modeling approach and for implementing the duct models in a form that could readily be used in this project; and Brian Smith (LBNL) for computer applications support throughout the project.

LBNL staff members in the Building Technologies Department were also helpful and supportive of this work, particularly regarding the intricacies of DOE-2.1E. The authors wish to thank Joe Huang, Fred Winkelmann, and Fred Buhl.

Advice of Michaël Kummert at the Solar Energy Laboratory, University of Wisconsin-Madison regarding TRNSYS compiling issues was greatly appreciated.

This project evolved from the ideas and work of Mark Modera (LBNL), who was the original project lead. Even after he left the project, Mark continued to provide contributions and was a valuable resource for the project team.

Finally, the authors would like to acknowledge the support and contributions of the PIER Contract Manager, Martha Brook, and the Buildings Program team under the leadership of Nancy Jenkins.

TABLE OF CONTENTS

ACKNOWLEDGEMENTS i
ABSTRACT 1
EXECUTIVE SUMMARY 2
1. INTRODUCTION 4
1.1 BACKGROUND 4
1.2 PROJECT OBJECTIVES 4
1.3 REPORT ORGANIZATION 5
2. CALIFORNIA DUCT SYSTEMS 6
2.1 DUCT SYSTEM TYPES 6
2.2 EFFECTS OF DUCT DEFICIENCIES 7
3. MODELING APPROACH 9
4. BUILDING AND HVAC SYSTEM CHARACTERISTICS 10
4.1 BUILDING ENVELOPE 10
4.2 BUILDING OPERATING CHARACTERISTICS 11
4.3 AIR-HANDLING SYSTEM DESCRIPTION 12
4.4 COOLING AND HEATING PLANT DESCRIPTION 13
4.5 DUCT LEAKAGE CHARACTERISTICS 13
4.6 PLENUM ENERGY BALANCE 14
4.7 FAN PERFORMANCE 15
4.8 SYSTEM AND PLANT SIZING 16
5. SYSTEM - PLANT ENERGY USE REGRESSIONS 18
6. RESULTS 22
6.1 AIR-HANDLER FAN POWER RATIOS 22
6.2 ENERGY CONSUMPTION 29
6.3 EQUIPMENT SIZING CONSIDERATIONS 30
6.4 HVAC SYSTEM OPERATING COSTS 30
6.5 DUCT SEALING COST EFFECTIVENESS 31
7. CONCLUSIONS 32
8. OTHER ISSUES AND IMPLICATIONS 32
GLOSSARY 34
REFERENCES 34
APPENDIX I: BUILDING SCHEDULES 37
APPENDIX II: REGRESSION EQUATIONS AND COEFFICIENTS 40
APPENDIX III: ENERGY PERFORMANCE IMPACTS 46
APPENDIX IV: EQUIPMENT SIZING IMPACTS 49
APPENDIX V: OPERATING COST IMPACTS 51

ABSTRACT

The purpose of this study is to evaluate the variability of duct leakage impacts on air distribution system performance for typical large commercial buildings in California. Specifically, a hybrid DOE-2/TRNSYS sequential simulation approach was used to model the energy use of a low-pressure terminal-reheat variable-air-volume (VAV) HVAC system with six duct leakage configurations (tight to leaky) in nine prototypical large office buildings (representing three construction eras in three California climates where these types of buildings are common). Combined fan power for the variable-speed-controlled supply and return fans at design conditions was assumed to be 0.8 W/cfm.

Based on our analyses of the 54 simulation cases, the increase in annual fan energy is estimated to be 40 to 50% for a system with a total leakage of 19% at design conditions compared to a tight system with 5% leakage. Annual cooling plant energy also increases by about 7 to 10%, but reheat energy decreases (about 3 to 10%). In combination, the increase in total annual HVAC site energy is 2 to 14%. The total HVAC site energy use includes supply and return fan electricity consumption, chiller and cooling tower electricity consumption, boiler electricity consumption, and boiler natural gas consumption.

Using year 2000 average commercial sector energy prices for California ($0.0986/kWh and $7.71/Million Btu), the energy increases result in 9 to 18% ($7,400 to $9,500) increases in HVAC system annual operating costs. Normalized by duct surface area, the increases in annual operating costs are 0.14 to 0.18 $/ft^2. Using a suggested one-time duct sealing cost of $0.20 per square foot of duct surface area, these results indicate that sealing leaky ducts in VAV systems has a simple payback period of about 1.3 years. Even with total leakage rates as low as 10%, duct sealing is still cost effective. This suggests that duct sealing should be considered at least for VAV systems with 10% or more total duct leakage.

The VAV system that we simulated had perfectly insulated ducts, and maintained constant static pressure in the ducts upstream of the VAV boxes and a constant supply air temperature at the air-handler. Further evaluations of duct leakage impacts should be carried out in the future after methodologies are developed to deal with duct surface heat transfer effects, to deal with airflows entering VAV boxes from ceiling return plenums (e.g., to model parallel fan-powered VAV boxes), and to deal with static pressure reset and supply air temperature reset strategies.

EXECUTIVE SUMMARY

Introduction. Despite the potential for significant energy savings by reducing duct leakage or other thermal losses from duct systems in large commercial buildings, California Title 24 has no provisions to credit energy efficient duct systems in these buildings. A substantial reason is the lack of readily available simulation tools to demonstrate the energy saving benefits associated with efficient duct systems in large commercial buildings. A related reason is that, although substantial energy increases due to duct leakage have been identified by recent field work and simulations, the variability of these impacts for the different building vintages and climates in California has not been established.

Purpose. The overall goal of the Efficient Distribution Systems (EDS) project within the PIER High Performance Commercial Building Systems Program is to bridge the gaps in current duct thermal performance modeling capabilities, and to expand our understanding of duct thermal performance in California large commercial buildings. As steps toward this goal, our strategy in the EDS project involves two parts: 1) developing a whole-building energy simulation approach for analyzing duct thermal performance in large commercial buildings, and 2) using the tool to identify the energy impacts of duct leakage in California large commercial buildings, in support of future recommendations to address duct performance in the Title 24 Energy Efficiency Standards for Nonresidential Buildings.

Objectives. The specific technical objectives for the EDS project were to:

1. Identify a near-term whole-building energy simulation approach that can be used in the impacts analysis task of this project (see Objective 3), with little or no modification. A secondary objective is to recommend how to proceed with long-term development of an improved compliance tool for Title 24 that addresses duct thermal performance.
2. Develop an Alternative Calculation Method (ACM) change proposal to include a new metric for thermal distribution system efficiency in the reporting requirements for the 2005 Title 24 Standards. The metric will facilitate future comparisons of different system types using a common "yardstick".
3. Using the selected near-term simulation approach, assess the impacts of duct system improvements in California large commercial buildings, over a range of building vintages and climates. This assessment will provide a solid foundation for future efforts that address the energy efficiency of large commercial duct systems in Title 24.

This report presents findings and recommendations that resulted from our modeling efforts related to duct thermal performance (Objective 3).

Outcomes. There are two principal outcomes from the work reported here:

Uniformity of Duct Leakage Impacts: A hybrid DOE-2/TRNSYS sequential simulation approach was used to model the energy use of a low-pressure terminal-reheat variable-air-volume HVAC system with six duct leakage configurations (tight to leaky) in nine prototypical large office buildings (representing 1980s, 1990s, and 2005 construction eras in three California climates where these types of buildings are common – Oakland, Pasadena, and Sacramento). Combined fan power for the variable-speed-controlled supply and return fans at design conditions was assumed to be 0.8 W/cfm.

Based on our analyses of the 54 simulation cases, we conclude that there can be substantial energy impacts due to duct leakage in this type of building. This finding is consistent with recent

field measurements in a large office building in Sacramento. Our analyses indicate that a leaky VAV system (19% total duct leakage) will use about 40 to 50% more fan energy annually than a tight system with 5% leakage. Annual cooling plant energy also increases by about 7 to 10%, but reheat energy decreases (about 3 to 10%). In combination, the increase in total annual HVAC site energy is 2 to 14%. The total HVAC site energy use includes supply and return fan electricity consumption, chiller and cooling tower electricity consumption, boiler electricity consumption, and boiler natural gas consumption.

Using year 2000 average commercial sector energy prices for California ($0.0986/kWh and $7.71/Million Btu), the energy increases result in 9 to 18% ($7,400 to $9,500) increases in HVAC system annual operating costs. Our simulations also indicate that climate and building vintage differences do not cause significant variability in duct leakage impacts on fan energy use or on operating cost for leaky duct systems. This suggests that a single duct leakage threshold could be developed for use in the Title 24 prescriptive compliance approach and would not need to be climate or building age specific.

Duct Sealing is Cost Effective: Normalized by duct surface area, the increases in HVAC system annual operating costs are 0.14 to 0.18 $/ft^2 for the 19% leakage case. Using a suggested one-time duct sealing cost of $0.20/ft^2 of duct surface area, these results indicate that sealing leaky ducts in VAV systems has a simple payback period of about 1.3 years. Even with total leakage rates as low as 10%, duct sealing is still cost effective. This suggests that duct sealing should be considered at least for VAV systems with 10% or more total duct leakage.

Recommendations. Before duct performance in large commercial buildings can be accounted for in Title 24 nonresidential building energy standards, there are several issues that must be addressed and resolved. These include:

1. Specifying reliable duct air leakage measurement techniques that can be practically applied in the large commercial building sector.
2. Defining the duct leakage condition for the standard building used in Title 24 compliance simulations.
3. Assuring consistency between simulated duct performance impacts and actual impacts.
4. Developing compliance tests for the Alternative Calculation Method (ACM) Approval Manual (CEC 2001b) to evaluate duct performance simulations.

Three additional steps will be required to further develop duct-modeling capabilities that address limitations in existing models and to initiate strong market activity related to duct system improvements. We recommend that these steps include:

1. Implementing duct models in user-friendly commercially-available software for building energy simulation, validating the implementations with case studies and demonstrations, and obtaining certification for software use as a primary or alternative compliance tool in support of the Title 24 Nonresidential Standards.
2. Developing methodologies to deal with airflows entering VAV boxes from ceiling return plenums (e.g., to model parallel fan-powered VAV boxes), to deal with duct surface heat transfer effects, and to deal with static pressure reset and supply air temperature reset strategies.
3. Transferring information to practitioners through publications, conferences, workshops, and other education programs.

1. INTRODUCTION

1.1 Background

Previous research suggests that duct systems in California commercial buildings suffer from a number of problems, such as thermal losses due to duct air leakage. For example, measurements by Diamond et al. (2003) in a large commercial building confirmed predictions by Franconi et al. (1998) that duct leakage can significantly increase HVAC system energy consumption: adding 15% duct leakage at operating conditions leads to a fan power increase of 25 to 35%. Diamond et al. also estimated that eliminating duct leakage airflows in half of California's existing large commercial buildings has the potential to save about 560 to 1,100 GWh annually ($60-$110 million per year or the equivalent consumption of 83,000 to 170,000 typical California houses), and about 100 to 200 MW in peak demand.

California Title 24, Part 6 (CEC 2001a) is one of the most advanced energy codes in the United States. The impacts of duct thermal performance in residences are already addressed by Title 24 compliance procedures; duct-system energy efficiency requirements have recently been added for small commercial buildings with individual packaged equipment serving 5,000 ft² or less where ducts are located in spaces between insulated ceilings and the roof, or outside the building; and new requirements for duct performance in other small commercial buildings are being developed. However, despite the potential for significant energy savings by reducing thermal losses from duct systems in large commercial buildings, Title 24 has no provisions to credit energy efficient duct systems in these buildings. A substantial reason is the lack of readily available simulation tools to demonstrate the energy saving benefits associated with efficient duct systems in large commercial buildings. A related reason is that, although substantial energy increases due to duct leakage have been identified, the variability of these impacts for the different building vintages and climates in California has not been established.

1.2 Project Objectives

The work reported here is part of the Efficient Distribution Systems (EDS) project within the PIER High Performance Commercial Building Systems Program. The EDS project goal is to bridge the gaps in duct system modeling capabilities, and to expand our understanding of duct thermal performance in California's large commercial buildings, by following through on the strategy outlined by Xu et al. (1999). As steps toward this goal, the project involves three specific technical objectives:

1. Identify a near-term whole-building energy simulation approach that can be used in the impacts analysis task of this project (see Objective 3), with little or no modification. A secondary objective is to recommend how to proceed with long-term development of an improved compliance tool for Title 24 that addresses duct thermal performance.
2. Develop an Alternative Calculation Method (ACM) change proposal to include a new metric for thermal distribution system efficiency in the reporting requirements for the 2005 Title 24 Standards. The metric will facilitate future comparisons of different system types using a common "yardstick".
3. Using the selected near-term simulation approach, assess the impacts of duct system improvements in California large commercial buildings, over a range of building vintages and climates. This assessment will provide a solid foundation for future efforts that address the energy efficiency of large commercial duct systems in Title 24.

In support of Objective 1, Wray (2003) carried out a review of documents related to past HVAC system modeling efforts, which was supplemented by discussions with other simulation experts. Based on that work, he defined a set of modeling principles and published HVAC component models that can be used to guide duct thermal performance modeling for large commercial buildings. He also suggested that the best short-term approach for evaluating duct leakage impacts on HVAC system performance is to build upon past research that used DOE-2 and TRNSYS sequentially (Franconi 1999).

However, Wray (2003) concluded that DOE-2 is not a suitable platform for the long-term development of models to address duct system performance in large commercial buildings. He suggested instead that EnergyPlus, which is based in part on DOE-2, be developed to include component models like the TRNSYS ones identified for use in this project's duct leakage impact analysis task. Although EnergyPlus has no duct performance models, we expect that the recommended enhancements could be applied in a relatively straightforward manner.

Regarding Objective 2, the California Energy Commission has accepted the ACM change that Modera (2002) proposed for the 2005 Title 24 Standards to address HVAC distribution system efficiency in large commercial buildings. The metric of interest, HVAC Transport Efficiency, characterizes the overall efficiency of the thermal distribution system as the ratio between the energy expended to transport heating, cooling, and ventilation throughout a building and the total thermal energy delivered to the various conditioned zones in the building. Since the proposal is for a set of reporting changes, the ACM proposal should not require significant effort on the part of ACM providers to implement the changes in existing Title 24 non-residential compliance software.

Objective 3 is the focus of the work reported here. In particular, this report presents findings and recommendations that resulted from our modeling efforts to assess the impacts of duct thermal performance improvements.

This project contributes to the PIER program objective of improving the energy cost and value of California's electricity in two ways. One is by developing analytical methods to show that well designed duct systems in large commercial buildings can save much of the energy used to move and condition air. The other is by making progress toward new requirements for commercial duct system efficiency in future revisions of Title 24. We expect that the new analytical capabilities and performance requirements will ultimately result in smaller capacity, more energy-efficient building systems, which will also reduce peak electrical demand from California's commercial building sector and improve the reliability and quality of California's electricity.

1.3 Report Organization

In **Section 2, California Duct Systems**, we briefly describe duct system types that are common in California large commercial buildings, and present an example to illustrate the effects of duct system deficiencies.

In **Section 3, Modeling Approach**, we summarize the DOE-2/TRNSYS simulation approach that we used to evaluate the impacts of duct leakage on VAV system performance.

In **Section 4, Building and HVAC System Characteristics**, we describe the characteristics of the prototypical large office building that we simulated, and summarize the 54 building vintage, climate, and duct leakage combinations that we used in this study.

In **Section 5, System - Plant Energy Use Regressions**, we summarize our approach to translate TRNSYS air-handling system coil loads into cooling and heating plant energy use.

In **Section 6, Results**, we describe the impacts of duct leakage on building energy performance, based on the simulation results. To improve readability, the large data tables referred to in this section are located after the **References** section.

In **Section 7, Conclusions**, we present what we learned from the research.

In **Section 8, Other Issues and Implications**, we recommend future activities.

Following the **Glossary** and **References**, there are two **Appendices**:

> "**Appendix I, Building Schedules**" lists the various operating schedules that we used in the simulations.
>
> "**Appendix II, Regression Equations and Coefficients**" provides details about the system - plant energy use regressions that we developed, and explains how they are used.

2. CALIFORNIA DUCT SYSTEMS

The information in this section briefly describes duct system types that are common in California large commercial buildings, and presents an example to illustrate the effects of duct system deficiencies. The intent of this section is to help the reader understand why we simulated VAV systems in large office buildings and to conceptualize how duct leakage can affect the performance of an HVAC system.

2.1 Duct System Types

Using survey data collected from 1988 through 1993 by or for California utilities and for the California Energy Commission, Modera et al. (1999) determined that there are three basic types of duct systems in California commercial buildings:

- *Single-duct* systems generate either a cool or warm air stream at the air-handler. The supply air is delivered to the conditioned zones through a single duct system connected to the air-handler. Reheat coils at individual terminal units can be used to add heat to the supply air when needed.
- *Dual duct* systems generate a cool air stream and a warm air stream at the air-handler. Each air stream is supplied to terminal boxes through a separate duct system. The terminal boxes mix the air streams before the supply air enters the zones.
- *Multizone* duct systems also generate a cool air stream and a warm air stream at the air-handler, but they use dampers at the air-handler instead of at a terminal box to mix the cool and warm air streams for each zone. Each zone's supply air is delivered through a separate duct system (this system is somewhat like several single-duct systems operating in parallel).

All of these duct systems use one of two methods to control the amount of energy supplied to each zone. A *constant-air-volume (CAV)* system delivers a fixed quantity of supply air to the conditioned space and maintains desired conditions by varying the temperature of the supply air. A *variable-air-volume (VAV)* system maintains space temperature by varying the quantity of supply air, generally at a fixed temperature.

Based on the floor area served by these duct systems (Modera et al. 1999), the most common system across different California building types is the single duct CAV system (71%). The next most common system type is the multizone system (19%). Single-duct VAV systems (8%) and dual duct systems (2%) serve the remainder of the floor area. Note that the fraction of multizone systems might be overrepresented by these data. Modera et al. indicated that the survey data may include some inappropriate affirmative responses for multizone systems. In some cases, the respondent may have called a system that serves more than one zone a multizone system, even though the system is not really a multizone system as described above. For example, some of the multizone systems might actually be single-duct VAV systems that serve multiple zones.

The fractions of floor areas served by CAV and VAV system types are difficult to determine, because the fractions for multizone and dual-duct systems are unknown. However, based on data from Modera et al. (1999) and EIA (2002), the fraction of VAV systems may be in the range of 8 to 34% of the total building floor area. The EIA data indicate that VAV systems serve 34% of the large commercial building floor area in the U.S. Pacific region, which includes California.

Although there are substantially fewer VAV systems than CAV systems in California, it is clear that VAV systems are used in a significant fraction of California buildings and need to be addressed when developing duct models for large commercial buildings. A reason to focus on VAV systems is that if one is able to model a VAV system, then a CAV system can also be modeled (it is a simplification of a VAV system). Another reason is that an EPRI study (Pietsch 1991) suggested a significant national trend over the past 30 years towards the use of VAV systems in new construction (e.g., about 75% of new duct systems in the period 1980 through 1990 were VAV systems).

Of the floor area served by single-duct VAV systems, the data from Modera et al. (1999) indicate that most (98%) of it is in large office buildings; the remainder (2%) is primarily in hotel and retail buildings. For this reason, we focused on large office buildings in our study.

2.2 Effects of Duct Deficiencies

In large commercial buildings, duct systems and the effects of deficiencies in these systems are much more complex than in most residential and small-commercial buildings. As an example to illustrate the effects of duct system deficiencies, consider a large commercial building equipped with a single-duct terminal-reheat VAV system that has leaky supply ducts located within a ceiling return air plenum.

When conditioned air leaks from the supply ducts, the heating or cooling energy associated with leakage heats or cools the return air and changes its temperature (and enthalpy). Depending on the temperature difference across each surface that separates the plenum from adjacent conditioned spaces and the outdoors, some of the energy associated with the leakage airflow is transferred from the plenum by conduction across these surfaces. The energy transferred by conduction between the plenum and adjacent zones may be beneficial or detrimental to zone loads. For example, when there is simultaneous heating of perimeter zones and cooling of the core zone, the heating energy associated with leakage from ducts that serve the perimeter zones will tend to increase plenum temperatures; the cooling energy associated with leakage from ducts that serve the core zone will tend to decrease plenum temperatures. A net increase in plenum temperatures will increase the core-zone cooling load and decrease the perimeter-zone heating loads. Conversely, a net decrease in plenum temperatures will decrease the core-zone cooling load and increase the perimeter-zone heating loads.

If the VAV boxes deliberately induce airflows from the ceiling plenum (driven by induction effects or by VAV box fans), the change in return air enthalpy affects the mixed supply air enthalpy within and downstream of the VAV box. This in turn affects the energy that is transferred to the conditioned spaces by these airflows. It can also affect VAV box reheat coil loads (e.g., reduced return air enthalpy due to cool supply air leakage upstream of the VAV box or from other ducts reduces the VAV box mixed air enthalpy and increases reheat coil loads).

A change in return air temperature due to duct leakage will also change cooling coil loads when the economizer is not operating. For example, consider an air-handler with an economizer that is controlled based on dry-bulb temperatures (rather than on enthalpies). When the outdoor air temperature is above the return air temperature high-limit set point, the amount of outdoor air entering the air-handler is the minimum required for ventilation. The remainder of the mixed airflow entering the air-handler (same flow rate as the supply airflow) is return air. Mechanical cooling is used to maintain the desired supply air temperature. In this case, the change in return air enthalpy due to duct leakage will affect the mixed air enthalpy entering the air-handler coils, and therefore will affect the cooling coil loads (e.g., reduced return air enthalpy due to cool supply air leakage reduces mixed air enthalpy and therefore reduces cooling coil loads). To maintain the desired air pressure differentials across the building envelope, some return air is discharged outdoors. This means that some of the heating or cooling energy associated with leakage is discharged to outdoors and is not recaptured at the air-handler.

When the outdoor air temperature is between the desired supply air temperature and return air temperature high-limit set point, the economizer operates with 100% outdoor air and no return air enters the air-handler (all of the return air is discharged outdoors). In this case, even though mechanical cooling is used as a supplement to maintain the desired supply air temperature, the change in return air enthalpy due to duct leakage does not affect mixed air enthalpy or cooling coil loads. When the outdoor air temperature is below the desired supply air temperature, there is no mechanical cooling and duct leakage again has no impact on air-handler coil loads. However, to maintain the desired supply air temperature in this case, a change in return air temperature (e.g., due to duct leakage) will cause the economizer to alter the amounts of return air and outdoor air that enter the air-handler.

In the case of a VAV box with leaky downstream ducts, the duct leakage means that insufficient heating or cooling energy is delivered to the conditioned spaces. As a result, the thermostat call for heating or cooling is not satisfied and the thermostat calls for more air to be supplied through the VAV box. To deliver more supply air, the VAV box primary air damper opens further, which in turn reduces the resistance to airflow in the duct system. Consequently, to maintain the main duct static pressure at its set point, the supply fan airflow must increase to compensate for the downstream leakage airflows. Upstream leakage has a similar effect on supply fan airflow, but no effect on VAV box flows (unless the supply fan is too small to maintain duct static pressure in the leaky duct system).

Because the relationship between fan power and airflow is somewhere between a quadratic and cubic function (Wray 2003), the increase in supply airflow to compensate for duct leakage means that supply fan power consumption increases significantly, with a large fraction of this fan power used just to move the leaking air. Increasing the fan power also increases cooling coil loads when mechanical cooling is being used to maintain the desired supply air temperature (when the economizer is operating at 100% or minimum outdoor air). This occurs because the heat created by the increased fan power tends to increase the supply air temperature downstream of the fan. In

response, the cooling coil water valve open furthers to provide more cooling to maintain the desired supply air temperature.

3. MODELING APPROACH

To evaluate the impacts of duct leakage on VAV system performance in large office buildings, we modeled a prototypical office building with different characteristics that represent three building vintages in three California climates with six different duct leakage configurations (54 cases), using DOE-2.1E (Winkelmann et al. 1993a, 1993b) and TRNSYS (Klein et al. 1996). Our modeling approach involves a three-step quasi-steady-state process in which the distribution system simulation is uncoupled from the loads and plant simulations of DOE-2, in the same manner that DOE-2 itself uses. The difference is that the TRNSYS system simulation expands beyond DOE-2 modeling capabilities to offer more flexibility in modeling duct thermal performance. The three steps in our modeling approach are as follows:

1. Hourly zone loads (heat extraction and addition rates) and zone air temperatures are calculated using DOE-2, for a constant air volume (CAV) system that has no duct leakage. These results are then output to a data file, which is read as input by TRNSYS. The data file also includes the corresponding hourly weather conditions, latent heat gains in conditioned spaces, and heat input to the ceiling plenum from lights. DOE-2 simulates all 8760 hours in a year.
2. TRNSYS generates hourly HVAC system fan and coil energy consumption data using interconnected detailed component models for the heating and cooling coils, fans, ducts, terminal boxes, economizer, and return plenum. The solution for each hour involves numerous iterations that terminate when convergence is achieved; convergence occurs when the error tolerances associated with component input and output variables are satisfied. Various duct leakage configurations are modeled at this stage. The TRNSYS analysis considers only hours when the HVAC system is operating. These hours (as defined in Appendix I) are: Monday through Friday, 6 a.m. to 8 p.m., and Saturday, 6 a.m. to 3 p.m.; they exclude Sundays and holidays (system is off on these days).
3. Regression analyses based on correlations that we developed between DOE-2 system and plant energy use are used to translate the TRNSYS system level coil load data to plant level energy use; energy costs are subsequently calculated based on this energy use.

In our evaluation, all but two of the effects described in Section 2.2 were modeled. The VAV box induction flows, as well as the impact on conditioned space loads of plenum temperature changes caused by duct leakage, were not modeled. Modeling these effects requires the use of coupled zone load and HVAC system models, which are not yet available in simulation tools that address duct leakage. Wray (2003) describes our modeling approach in more detail, the duct performance principles on which it is based, and the TRNSYS component models that we used.

An advantage of using the DOE-2/TRNSYS approach in this project is that DOE-2 prototypical models for a large commercial California building are already available, as are the custom TRNSYS component models (Franconi 1999). Another advantage is that the duct leakage modeling approach and its results for a California building have already been validated by Franconi, and no substantial changes to the simulation tool are required to carry out our analyses. No other whole-building modeling approach to assess duct system performance for large commercial buildings is currently as advanced as this approach.

4. BUILDING AND HVAC SYSTEM CHARACTERISTICS

In this study, we modeled a ten story, 150,000 ft^2 office building. Each story has a floor area of 15,000 ft^2 and is divided into five zones: four 15-ft wide perimeter zones and one core zone. Each set of five zones has a ceiling plenum above them that serves as the return air plenum. The mechanical plant is located in a below-grade basement.

4.1 Building Envelope

We modeled three construction eras (1980s, 1990s, and 2005) in three California climates where large commercial buildings are common (Oakland, Pasadena, and Sacramento). The building envelope thermal characteristics are listed in Table 1 for the 1980s and 1990s era buildings and in Table 2 for the 2005 era building. The general characteristics of the 1980s and 1990s era buildings were determined in a previous study (Huang and Franconi 1999). The 2005 era building is based on the requirements of the proposed 2005 California Title 24 Nonresidential Energy Standards (CEC 2003a).

In each case, the intermediate floors are 4 in. thick lightweight (80 lb/ft^3) concrete slabs, covered with a carpet and fibrous pad. The basement floor is a 6 in. thick heavyweight concrete slab on top of soil. The exterior walls are 1 in. thick stone (140 lb/ft^3), 2 in. x 4 in. steel studs (16 in. on center), insulation in the wall cavities, and 5/8 in. thick sheet rock. Windows are double-glazed. The bottom of each ceiling return plenum (conditioned space ceiling) is 3/4 in. thick, 2 ft. x 4 ft. acoustic ceiling tiles laid in a steel T-bar frame. The roof assembly above the top story's ceiling return plenum consists of built-up roofing, 4 in. thick lightweight concrete, and insulation. The R-values and U-values that are listed in Tables 1 and 2 are for entire assemblies, not including air films.

Table 1. Building Envelope Characteristics - 1980s and 1990s Construction Based on Huang and Franconi (1999)

	1980s Construction	1990s Construction
Roof		
Assembly R-value ($h \cdot °F \cdot ft^2/Btu$)	13.1	14.5
Walls		
Assembly R-value ($h \cdot °F \cdot ft^2/Btu$)	3.1	6.6
Windows		
Assembly U-value ($Btu/(h \cdot °F \cdot ft^2)$)	0.72	0.60
Relative Solar Heat Gain (RSHG)*	0.69	0.62
Shading Coefficient**	0.77	0.71
Window/Zone-Wall Area Ratio	40%	50%

* RSHG is a function of the solar heat gain coefficient ($SHGC_{win}$), the window orientation, and the size and position of overhangs. Because the prototypes modeled do not have overhangs, RSHG=SHGC.
** Shading Coefficient = SHGC/0.87 = RSHG/0.87.

Table 2. Building Envelope Characteristics – 2005 Title 24 Based on the Draft 2005 Title 24 Standards (CEC 2003a)

	Oakland (CZ 3)	Pasadena (CZ 9)	Sacramento (CZ 12)
Roof			
Assembly R-value (h·°F·ft^2/Btu)	20.9	12.9	20.9
Walls			
Assembly R-value (h·°F·ft^2/Btu)	5.4	5.4	5.7
Windows			
Assembly U-value (Btu/(h·°F·ft^2))	0.77	0.77	0.47
Relative Solar Heat Gain (RSHG)*			
North	0.61	0.61	0.47
Non-North	0.41	0.34	0.31
Shading Coefficient (SC)**			
North	0.701	0.701	0.54
Non-North	0.471	0.391	0.356
Window/Zone-Wall Area Ratio	40%	40%	40%

* The CEC 2005 Title 24 Standards specify a maximum Relative Solar Heat Gain (RSHG) as listed above. RSHG is a function of the solar heat gain coefficient ($SHGC_{win}$), the window orientation, and the size and position of overhangs. We used the RSHGs specified in the 2005 Title 24 Draft Standards. Because the prototypes modeled do not have overhangs, RSHG=SHGC.
** Shading Coefficient = SHGC/0.87 = RSHG/0.87.

4.2 Building Operating Characteristics

Table 3 lists the operating characteristics that we used to model the building prototypes in DOE-2. Schedules describing when these characteristics apply are listed in Tables I-1 through I-7 of Appendix I. These schedules are based on the draft 2005 Title 24 schedules (CEC 2003a).

Table 3. Building Operating Characteristics

	1980s*	1990s*	2005 Title 24 Draft Standard**
Infiltration (ach)			
HVAC System Operating	0	0	0
HVAC System Off	0.30$^+$	0.30$^+$	0.075***
Minimum Outside Air (cfm/person)	15	15	15
Occupancy (ft^2/person)	100	100	100
Lighting Intensity (W/ft^2)	1.8	1.3	1.1
Equipment Load (W/ft^2)	0.75	0.75	1.34

* Huang and Franconi (1999), Table 10.
$^+$ Huang (2003).
** CEC (2003a).
*** Based on 0.038 cfm/ft^2 of exterior wall area, as proposed in the 2005 Title 24 Draft (CEC 2003a).

Infiltration is assumed to be zero when the HVAC system is operating. When the HVAC system is off, the infiltration rate is assumed to be the air change rate listed in Table 3, as appropriate for each case. The "off hours" infiltration rate for the 1980s and 1990s era buildings (0.3 ach, Huang

2003) is about midway in the range reported by Grot and Persily (1986) for eight 1980s era office buildings that they tested (0.1 to 0.6 ach). The hourly outdoor airflow rates modeled during system operating hours are based on the hourly occupancy schedules and the outdoor airflow rate requirements per person specified in the draft 2005 Title 24 standard (CEC 2003a).

Of the heat generated by the light fixtures, 45% is transferred to the occupied zones; the remainder goes to the ceiling return plenum (Huang 2003).

4.3 Air-Handling System Description

The single-duct VAV terminal-reheat air distribution system that we modeled in TRNSYS includes an airside economizer, a cooling coil, a variable-speed supply fan, five pressure-independent VAV-boxes (each with a discharge reheat coil), a ceiling return air plenum, and a variable-speed return fan. The system serves the five building zones on a single floor: four perimeter zones and one core zone. It is assumed that identical systems serve each of the ten floors in the building.

The system economizer uses the following control strategy:

- When the outdoor air temperature is above the return air temperature high-limit set point (70ºF in Sacramento, and 75ºF in Oakland and Pasadena, CEC 2003a), the amount of outdoor air entering the air-handler is the minimum required for ventilation. The remainder of the mixed airflow entering the air-handler (same flow rate as the supply airflow) is return air. Mechanical cooling is used to maintain the desired supply air temperature. To maintain a zero air pressure differential across the building envelope, the amount of return air discharged to outdoors is the same as the amount of outdoor air entering the air-handler.
- When the outdoor air temperature is between the desired supply air temperature and return air temperature high-limit set point, the economizer operates with 100% outdoor air and no return air enters the air-handler (all of the return air is discharged outdoors). Mechanical cooling is used as a supplement to maintain the desired supply air temperature.
- When the outdoor air temperature is below the desired supply air temperature, there is no mechanical cooling. In this case, the economizer mixes appropriate amounts of return air and outdoor air to maintain the desired supply air temperature.

In all cases, the minimum outdoor air ventilation rate is set to correspond to a minimum outdoor airflow of 2,250 cfm per floor at design conditions. This value is based on the occupant density of 100 ft^2/person and the outdoor-air ventilation rate of 15 cfm/person described in Table 3. For each case, the minimum outdoor air ventilation rate is a constant fraction of the supply fan airflow, but this fraction is not necessarily constant from case to case because design supply airflows vary from case to case.

The cooling coil control is simple: a constant supply air dry-bulb temperature of 53ºF is maintained downstream of the supply fan. This temperature was selected to achieve a 20ºF supply air temperature difference relative to the 73ºF cooling set-point temperature of the conditioned spaces.

All VAV boxes have the same flow fraction at their minimum turndown. For each box, this fraction is set at 40% of the design maximum flow rate entering the box to ensure that sufficient

heat can be delivered to the zone, assuming a 180°F water temperature entering the reheat coils. In some cases, lower turndown fractions (e.g., 30%) could have been used to satisfy heating requirements; however, for consistency, we used the same turndown fraction in all cases.

4.4 Cooling and Heating Plant Description

A water-cooled hermetic centrifugal chiller supplies chilled water to the air-handling system cooling coil. The chiller rejects heat outdoors using a cooling tower. A natural-gas-fired boiler supplies hot water to the VAV box reheat coils. We used the default DOE-2 plant equipment models for the chiller, cooling tower, boiler, and associated circulation pumps.

The heat gain associated with the boiler standby loss to the unconditioned basement (Btu/h) is calculated as 0.0057 times the boiler fuel efficiency (80% for the 2005 vintage, 79% for the others) times the total building occupied floor area (Franconi 1999). Combustion air to the basement for the boiler is assumed to be two air changes per hour (Huang 2003).

4.5 Duct Leakage Characteristics

Upstream Leakage

The supply and return fans in the VAV system have variable-speed-drive control. Although not modeled explicitly, we assume that the HVAC control system varies the supply fan airflow to maintain a constant duct static pressure upstream of the VAV boxes. In a VAV distribution system with constant static-pressure control, the pressure distribution along the ducts upstream of the VAV zone boxes is affected by several parameters, which include: the duct friction and fitting pressure drops, the system equipment (e.g., mixing dampers, cooling coil, air filters) pressure drops, the static-pressure set point, and the placement of the static-pressure sensor. The duct and system equipment pressure drops vary with airflow. Therefore, in general, the pressure differences across the upstream leaks when the fan operates at design conditions (maximum fan airflow) will differ from the pressure differences across the leaks during part-load fan operation (reduced fan airflow). In certain circumstances, upstream leakage airflow is not affected by part-load fan operation and the average upstream duct air leakage is constant. This is only precisely true when all of the duct leaks are located at the same location as the pressure sensor, and pressure reset control is not in use.

The simplifying assumption that we used for modeling leakage upstream of the VAV boxes is that the upstream leakage airflow is constant and is not affected by the airflow through the fan. This implies that the fraction of the fan airflow that is leaking upstream of the VAV boxes increases as the fan airflow is reduced.

Downstream Leakage

Downstream of a VAV box, the duct pressure distribution is affected by the box damper position, which provides a variable flow resistance to control the downstream duct airflow. The pressure differences across the leaks in the downstream ducts can be related to the average pressure drop through these ducts. If turbulent flow through the duct is assumed, the airflow rate affects the duct pressure drop according to the square law. If it is also assumed that there is a square root relationship between leakage flow and pressure difference across the duct leaks, then the fraction of the VAV box airflow that leaks from the ducts downstream of the boxes remains approximately constant. However, the leakage airflow is not constant.

Nominal Leakage Fraction

Based on the simplifying assumptions described above, two inputs are required to describe supply duct leakage in the TRNSYS simulation: upstream leakage fraction and downstream leakage fraction. The upstream leakage fraction is the upstream leakage flow, which is a constant for all part load ratios, divided by the supply fan design airflow. The downstream leakage fraction is a constant fraction of the VAV box airflow, which varies during system operation.

In the TRNSYS simulations, we used six leakage configurations in each of the three climates for each of the three building vintages (54 cases) to evaluate the variability of duct leakage impacts on HVAC system energy performance:

- 10+10, which refers to a 10% leakage fraction upstream of the VAV boxes and a 10% leakage fraction downstream of the VAV boxes (about 19% total leakage) at design flow;
- 7.5+7.5, which refers to 7.5% leakage fractions upstream and downstream (about 14% total leakage) at design flow;
- 10+2.5, which refers to a 10% leakage fraction upstream and a 2.5% leakage fraction downstream (about 12% total leakage) at design flow;
- 2.5+10, which refers to a 2.5% leakage fraction upstream and a 10% leakage fraction downstream (also about 12% total leakage) at design flow;
- 5+5, which refers to 5% leakage fractions upstream and downstream (about 10% total leakage) at design flow; and
- 2.5+2.5, which refers to 2.5% leakage fractions upstream and downstream (about 5% total leakage) at design flow.

The last case represents a tight duct system, but not a perfect one with zero leakage. It is unlikely that real duct systems can be made perfectly tight.

Note that the sum of the upstream and downstream leakage fractions at design flow do not equal the total leakage fraction. This is because the upstream leakage is a fraction of the supply fan flow and the downstream leakage is a fraction of the flow entering the VAV boxes. For example, in the 10+10 case, if the supply fan flow is 10,000 cfm, then the upstream leakage is 1,000 cfm (10% of 10,000 cfm) and 9,000 cfm reaches the VAV boxes. The downstream leakage is therefore 900 cfm (10% of 900 cfm) and 8,100 cfm reaches the zones. This means that a total of 1,900 cfm or 19% of the 10,000 cfm supply fan flow has leaked from the ducts.

4.6 Plenum Energy Balance

In our TRNSYS model of the ceiling return air plenum, the zone return air passes through an open ceiling plenum and then to the return air ducts and fan. An energy balance is used to determine the return plenum air temperature. This energy balance accounts for the effects of supply-duct air leakage, plenum "floor" (zone ceiling) and "ceiling" (zone floor) conduction, plenum exterior wall conduction, heat gain from ceiling-mounted lights, and zone return airflow.

Our simulations show that the plenum is slightly cooler when there is duct leakage. For each hour in the leakiest case (19% total duct leakage), the plenum temperature is 1 to 2ºF cooler than the corresponding temperature in the "tight" (5% total duct leakage) case. The largest plenum temperature reduction occurs when the cooling effect due to supply air leakage is largest, which is also when the largest net cooling load in the conditioned zones occurs. These plenum

temperature changes are consistent with our field observations in an office building when 15% leakage was added to a VAV system with 5% leakage (Diamond et al. 2003).

Although we included the effects of plenum "floor" and "ceiling" conduction in calculating the return plenum air temperature, our uncoupled sequential approach to evaluate the zone loads and HVAC system performance ignores the impact of the plenum temperature changes due to leakage on heating or cooling loads and air temperatures in the conditioned zones. We ignored this effect because it is small compared to the impacts of other gains and losses in the conditioned spaces (e.g., solar loads; occupancy, equipment, and lighting heat gains; exterior wall and window conduction). For example, the largest plenum temperature reduction (2ºF) due to 19% total leakage, which corresponds with the largest net cooling load in the conditioned zones, would only reduce the cooling load by about 3%. A more rigorous approach to account for this effect would involve a coupled simultaneous solution of the loads, system, and plant performance. In the future, EnergyPlus could be used for this purpose if the TRNSYS duct models were integrated with that program.

4.7 Fan Performance

In many hourly simulation programs, including DOE-2, the fan performance subroutines are based on a third-order polynomial relating the fan fractional shaft power to the fan part load airflow ratio (Brandemuehl et al. 1993). The form of the equation is:

$$FPR = c_0 + c_1 \cdot PLR + c_2 \cdot PLR^2 + c_3 \cdot PLR^3 \tag{1}$$

where

FPR: Fan power ratio, which is the dimensionless ratio of the fan shaft power at a particular time to the fan shaft power under design conditions;

PLR: Part load ratio, which is the dimensionless ratio of the fan airflow at the same time to the fan airflow under design conditions; and

$c_0 \ldots c_3$: Constant coefficients for the curve fit. The specific coefficients depend on the pressure drop, pressure control, and airflow characteristics of the system.

Table 4 defines the coefficients for various fan control schemes. These include: outlet damper control, inlet vane control, and variable speed control. There are two sets of coefficients listed for variable speed control. One is a set of coefficients used in DOE-2 and in the ASHRAE HVAC Toolkit for a generic fan, and produces a curve similar to the one used by Franconi (1999) for part load airflow fractions of one or less. The other set corresponds to the relation defined in the Title 24 Nonresidential Alternative Calculation Method (ACM) (CEC 2003b) for a variable speed drive with static pressure control. We used the Title 24 set of coefficients in our simulations.

Table 4. Polynomial Coefficients for Fan Performance Curves

Fan Control Type	c0	c1	c2	c3
Outlet Damper	0.3507	0.3085	-0.5414	0.8720
Inlet Vane	0.3707	0.9725	-0.3424	0
Variable Speed Drive (Generic)	0.0015	0.00521	1.1086	-0.1164
Variable Speed Drive (Title 24)	0.1021	-0.1177	0.2647	0.7600

Figure 1 shows the differences between the relationships. For fan part load airflow fractions greater than about 0.33, the Title 24 curve results in the lowest fan power. In our simulations, fan part load flow fractions were typically concentrated in a range of 0.4 to 0.8.

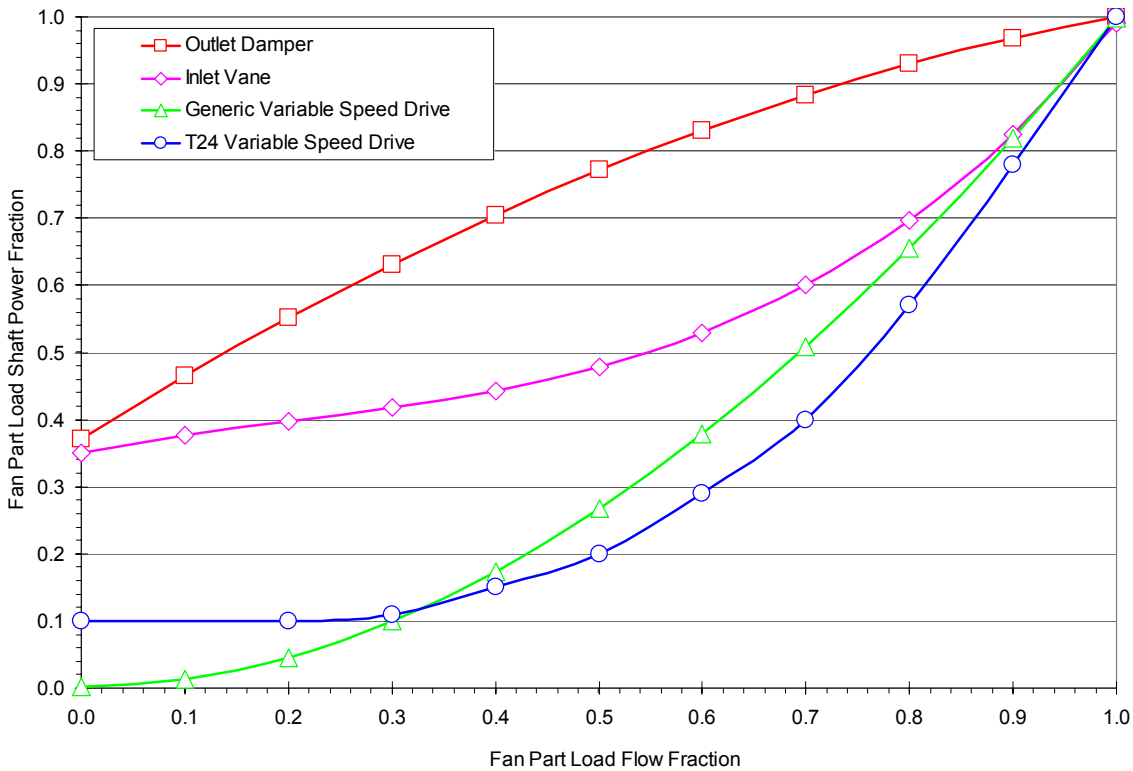

Figure 1. Comparison of Fan Performance Curves

4.8 System and Plant Sizing

The VAV system that we simulated in TRNSYS used the same size system and plant equipment for the various duct leakage cases in a given climate and for a given building vintage; however, the sizes varied over the nine building vintage and climate combinations.

The supply (and return) fan design airflow was determined by the high-leakage case (10+10), because the maximum airflow occurs for that case. The intermediate-floor supply fan design airflows for each climate and building vintage combination are listed in Table 5, and are based on the calculated zone airflow requirements with leakage effects added. Supply and return fan power at design conditions are based on the design airflow, total pressure rises of 3 in. of water for the supply fan and 1 in. of water for the return fan, a combined fan and drive efficiency of 65% for each fan, and motor efficiencies of 90% for the supply fan and 88% for the return fan. Based on these fan parameters, the specific total fan electrical power is 0.8 W/cfm. These parameters represent a low-pressure system that serves a single floor. Systems with larger pressure rises will use more fan power, which will make duct sealing even more cost-effective.

Table 5. TRNSYS Air-Handler Fan Design Parameters (Airflows and Electrical Power for Intermediate Floor)

Climate Zone	Vintage	Supply Fan Airflow (cfm)	Supply Fan Power (kW)	Return Fan Power (kW)	Total Fan Power (kW)
CZ3 (Oakland)	1980s	13,000	7.8	2.8	10.6
	1990s	13,000	7.8	2.8	10.6
	2005	10,500	6.3	2.2	8.5
CZ9 (Pasadena)	1980s	21,100	12.7	4.5	17.2
	1990s	23,700*	14.3	5.0	19.3
	2005	15,200	9.1	3.2	12.3
CZ12 (Sacramento)	1980s	16,800	10.1	3.6	13.7
	1990s	16,300	9.8	3.5	13.3
	2005	12,100	7.3	2.6	9.9

* Increased wall insulation and window solar heat gain in the 1990s changed the time (and therefore outdoor conditions) when peak loads occur in the Pasadena building. This resulted in increased indoor temperatures when the air-handling system is off, which in turn resulted in larger cooling loads at the start of the occupied (conditioned) periods.

The chilled-water coil and VAV-box reheat coils are also sized sufficiently to meet the maximum coil loads (20% oversizing). For sizing the cooling coils, we assumed a 12ºF water-side temperature rise and an entering water temperature of 44ºF; for the reheat coils, we assumed the water-side temperature drop was 30ºF and the entering water temperature was 180ºF.

Table 6 summarizes the cooling and heating coil sizes per floor that were generated by DOE-2 (for a CAV system), and which DOE-2 used to size the plant equipment for its plant energy use simulations (with no duct leakage). Table 6 also lists the corresponding coil sizes that we calculated and that were used in the TRNSYS VAV system simulations. The TRNSYS coil sizes differ from the DOE-2 sizes for three reasons:

1. The TRNSYS cooling and heating coil sizes account for the effects of duct leakage on coil loads.
2. The TRNSYS reheat coil sizes are for a VAV system rather than a CAV system, and VAV system reheat loads are smaller because supply airflows are lower during reheat for a VAV system.
3. The TRNSYS sizes are based on the zone loads and corresponding zone temperatures generated by DOE-2, but are determined using VAV system-sizing calculations independent of DOE-2. The calculations that we used are based on methods outlined by Knebel (1983), Kreider and Rabl (1994), and Pedersen et al. (1998).

Table 6. Cooling and Heating Coil Sizes (kBtu/(h·floor))

		DOE-2		TRNSYS	
Climate Zone	Vintage	Cooling	Heating	Cooling	Heating
CZ3 (Oakland)	1980s	315	354	470	262
	1990s	308	331	458	236
	2005	252	271	407	202
CZ9 (Pasadena)	1980s	428	277	528	177
	1990s	419	270	544	185
	2005	353	198	483	129
CZ12 (Sacramento)	1980s	450	438	598	337
	1990s	434	397	576	294
	2005	339	249	483	180

5. SYSTEM - PLANT ENERGY USE REGRESSIONS

As described in Appendix II, we determined that the whole-building heating and cooling plant hourly demands and annual energy consumption (electricity and natural gas) can be predicted based on the heating and cooling coil loads of a mid-height intermediate floor. In this analysis, we calculated hourly heating and cooling part load factors for the intermediate floor and for the whole building. For the intermediate floor, the five reheat coil loads were summed for each hour to obtain an hourly total heating coil load for that floor. The hourly total heating coil loads for the floor were then divided by the maximum of those values to obtain the intermediate-floor hourly heating part load ratios. We used the hourly total cooling coil loads for the same floor in a similar manner to determine the intermediate-floor hourly cooling part load ratios. Also, we used the whole-building hourly heating and cooling total coil loads in the same manner to obtain the whole-building heating and cooling part load ratios.

We used regression techniques to generate polynomial relationships between the intermediate-floor hourly part load ratios and the hourly whole-building plant energy demand (chiller electricity, cooling tower electricity, and boiler electricity and natural gas). Tables II-3a though II-6c in Appendix II provide the regression equations, equation coefficients, regression R^2 values, and example predicted values. The R^2s for the regression equations for all three vintages and climate zones ranged from 0.9999 to 1.000 for the chiller electricity demand, 0.9338 to 0.9997 for the cooling tower electricity demand, 0.9990 to 1.0000 for the boiler electricity demand, and 0.9984 to 0.9997 for the boiler natural gas demand. The resulting equations were applied to the TRNSYS coil loads to predict whole building plant electricity and natural gas consumption for each of the various leakage cases modeled.

Figures 2 through 7 provide example regression plots to illustrate the relationships between the various parameters for the 2005 Title 24 compliant building in Sacramento (CEC Climate Zone 12). These plots are representative of the plots for other climate zones and building vintages. In particular, Figures 2 and 3 compare the whole-building part load ratios and the intermediate-floor part load ratios. Figures 4 through 7 show, for the same building prototype and climate, the chiller, cooling tower, and boiler electricity demand curves, and the boiler natural gas demand curve, all based on the intermediate-floor part load ratios. Compared to the other plant demand

data, the cooling tower electricity data has more scatter. However, the annual cooling tower electricity consumption predicted using the regression equation was less than 1% different from the annual sum of the cooling tower electricity consumption reported by DOE-2.

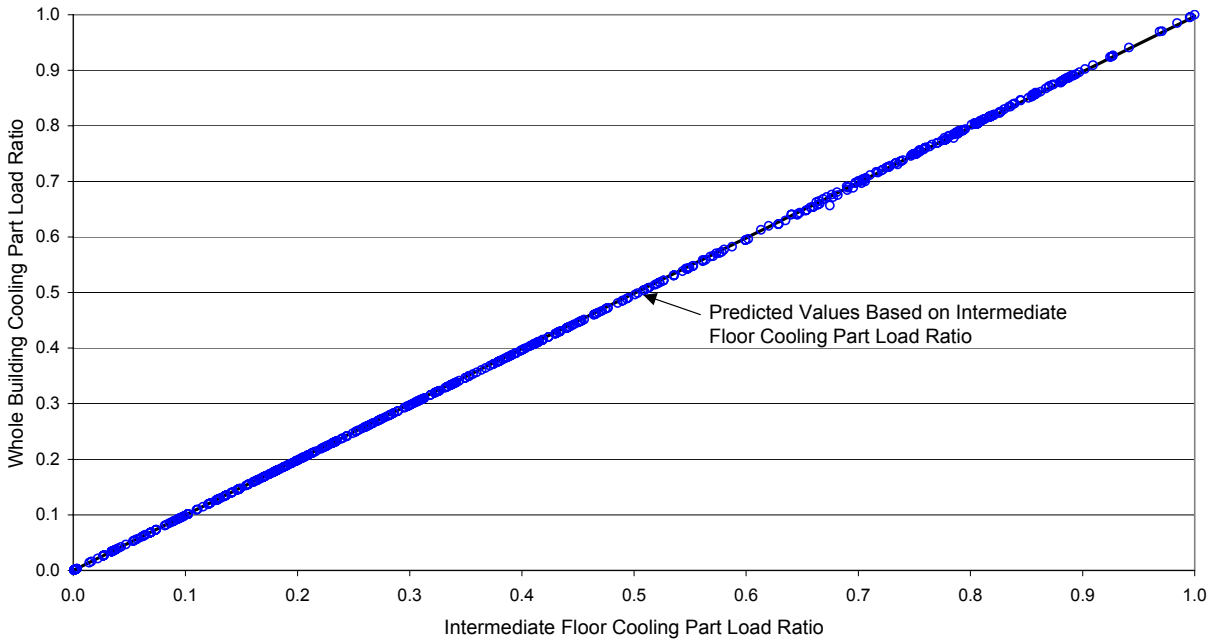

Figure 2. Building Cooling Part Load Ratio Regression
CZ 12 (Sacramento) - 2005 Title 24 Compliant Large Office Building

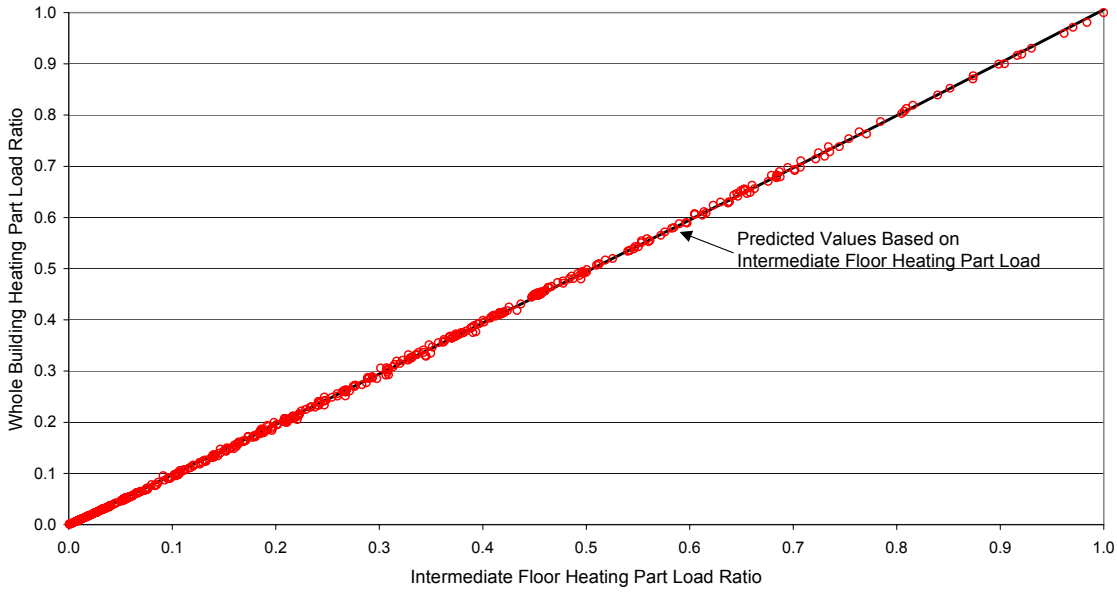

Figure 3. Building Heating Part Load Ratio Regression
CZ 12 (Sacramento) - 2005 Title 24 Compliant Large Office Building

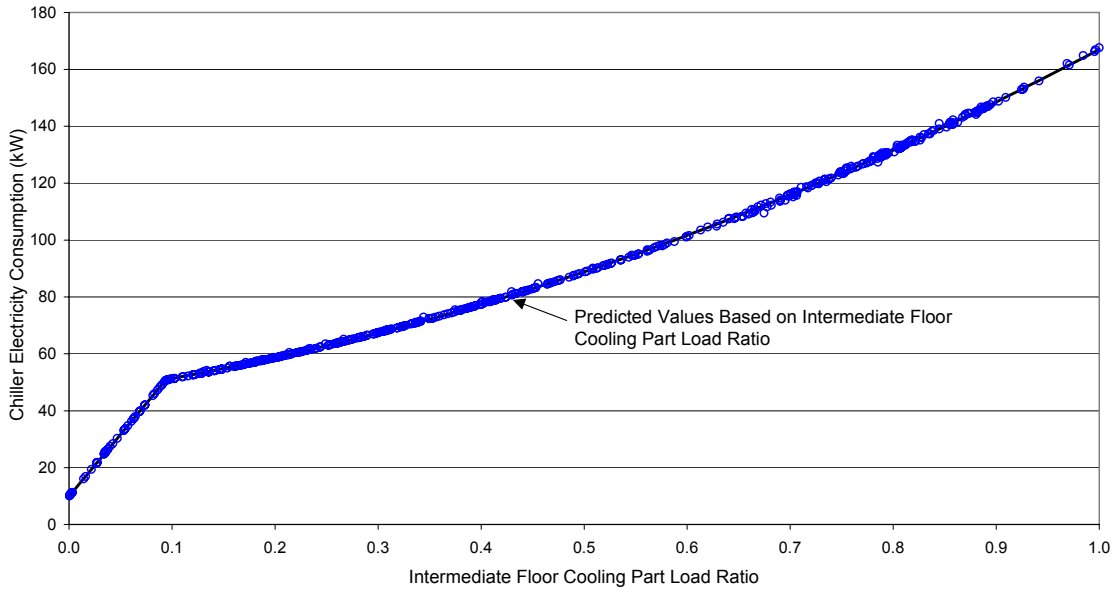

Figure 4. Chiller Electricity Consumption (kW)
CZ 12 (Sacramento) - 2005 Title 24 Compliant Large Office Building

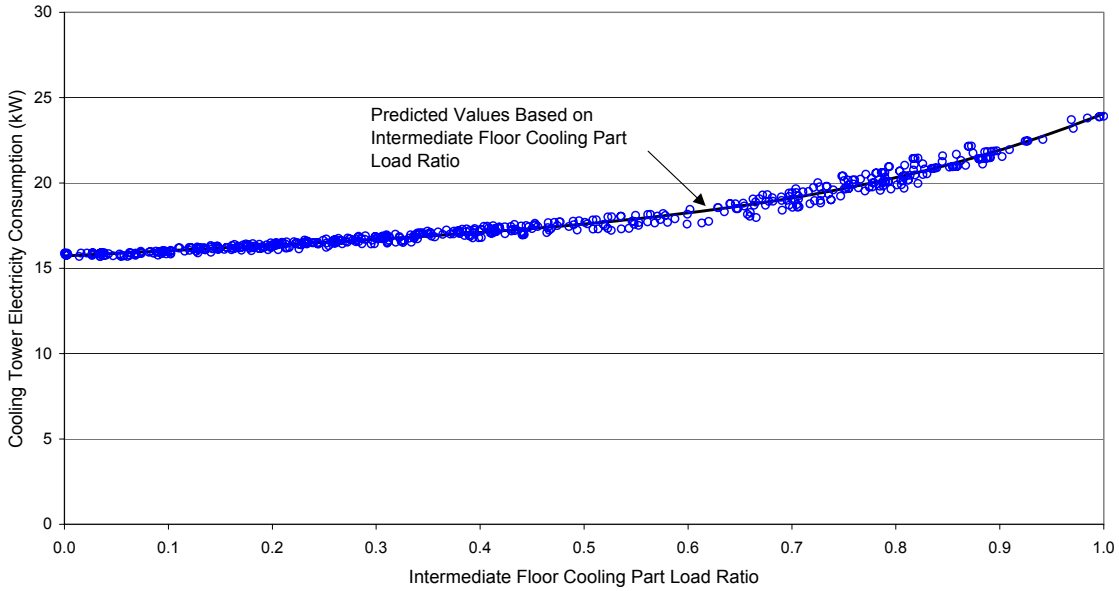

Figure 5. Cooling Tower Electricity Consumption (kW)
CZ 12 (Sacramento) - 2005 Title 24 Compliant Large Office Building

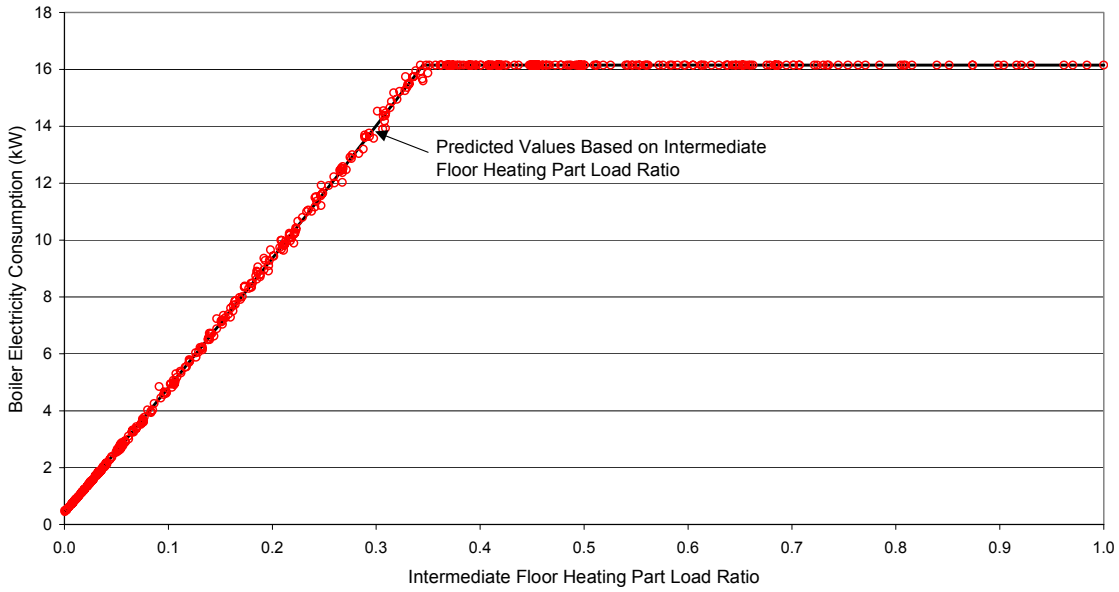

Figure 6. Boiler Electricity Consumption Regression (kW)
CZ 12 (Sacramento) - 2005 Title 24 Compliant Large Office Building

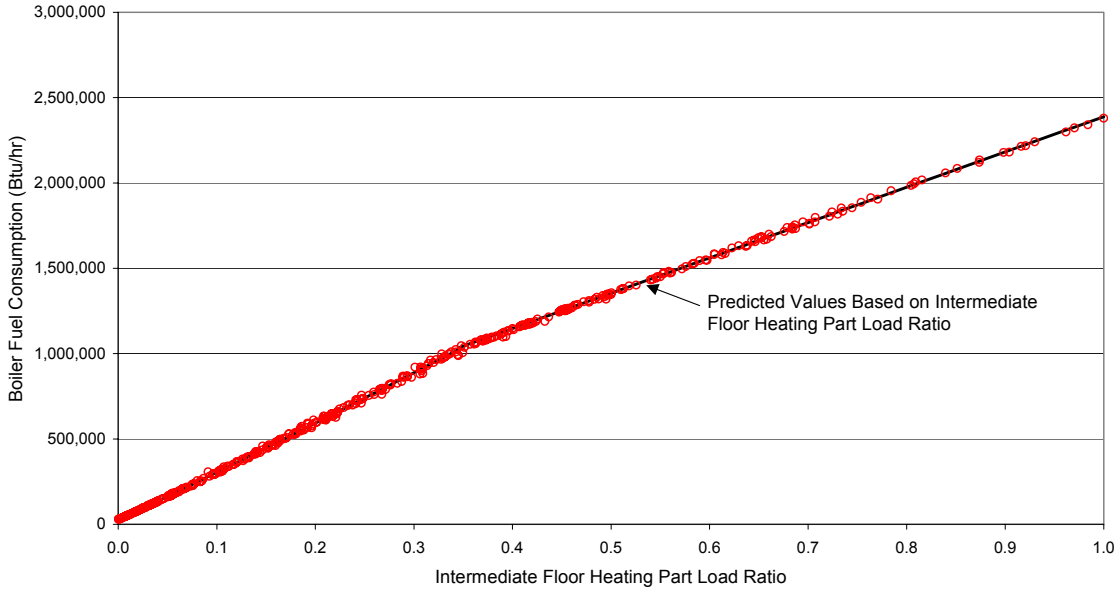

Figure 7. Boiler Fuel Consumption Regression (Btu/h)
CZ 12 (Sacramento) - 2005 Title 24 Compliant Large Office Building

6. RESULTS

The sequential DOE-2/TRNSYS modeling approach could best be described as "user hostile". It is unlikely this approach would be practical on a day-to-day basis for Title 24 compliance analyses or even ever used outside a research environment. To reduce the difficulty of using this approach, the authors have developed a spreadsheet-based "graphical interface" (not generated by TRNSYS itself) that organizes and displays various key input and output parameters of TRNSYS. This graphical aid greatly facilitates understanding the complex interactions between system flows, loads, and temperatures.

Figures 8 and 9 show two samples of the performance parameters calculated by TRNSYS for two different hours of VAV system operation in the 2005 Title 24 Sacramento building. Both cases represent a system with 10% duct leakage upstream and 10% duct leakage downstream of the VAV boxes at design conditions. Dashed lines leading from the ducts to the ceiling plenum show leakage paths.

Figure 8 shows the system performing on a cool January day under heating conditions, with the VAV boxes operating at or near their minimum flows, and with reheat being added to the supply air for all five zones. In this case, the economizer is partly open to mix outdoor air with return air and maintain the desired supply air temperature downstream of the supply fan, so that no heat needs to be extracted by mechanical cooling through the cooling coil. A supply air temperature reset strategy would reduce the reheat coil loads in this case, but our TRNSYS models for a VAV system do not include this capability.

In Figure 9, the system is performing with a large cooling load in every zone at the start of a warm July day. All VAV boxes are open part way to supply sufficient cool air to meet the zone loads. There is no reheat in this case. The economizer is open completely to reduce the mechanical cooling through the cooling coil. All return air is exhausted to outdoors.

6.1 Air-Handler Fan Power Ratios

The largest effect that duct leakage has on distribution system performance is to increase fan energy consumption. Using the DOE-2/TRNSYS simulation approach, we explored the impacts of upstream and downstream leakage independently and in combination.

Figures 10 through 14 show the hourly supply and return fan power ratios versus the fraction of design airflow delivered to the zones for the 2005 Title 24 Sacramento building. The fan power ratio is the hourly fan power for the leaky duct case relative to the fan power in the same hour for the tight duct system (about 5% total leakage). Five cases are shown: 2.5% upstream leakage plus 10% downstream leakage, 10% upstream leakage plus 2.5% downstream leakage, 10% upstream leakage plus 10% downstream leakage, 7.5% upstream leakage plus 7.5% downstream leakage, and 5% upstream leakage plus 5% downstream leakage. The upstream leakage is a fixed mass flow (specified fraction of supply fan design flow rate); the downstream leakage is a fixed fraction of VAV box flow, even under part-load conditions. The air mass flow through the return fan matches the air mass flow through the supply fan (return fan and supply fan volumetric flows differ due to air temperature differences between the two airstreams).

Plots for other climates and building vintage combinations are not shown, but are similar to the five included here.

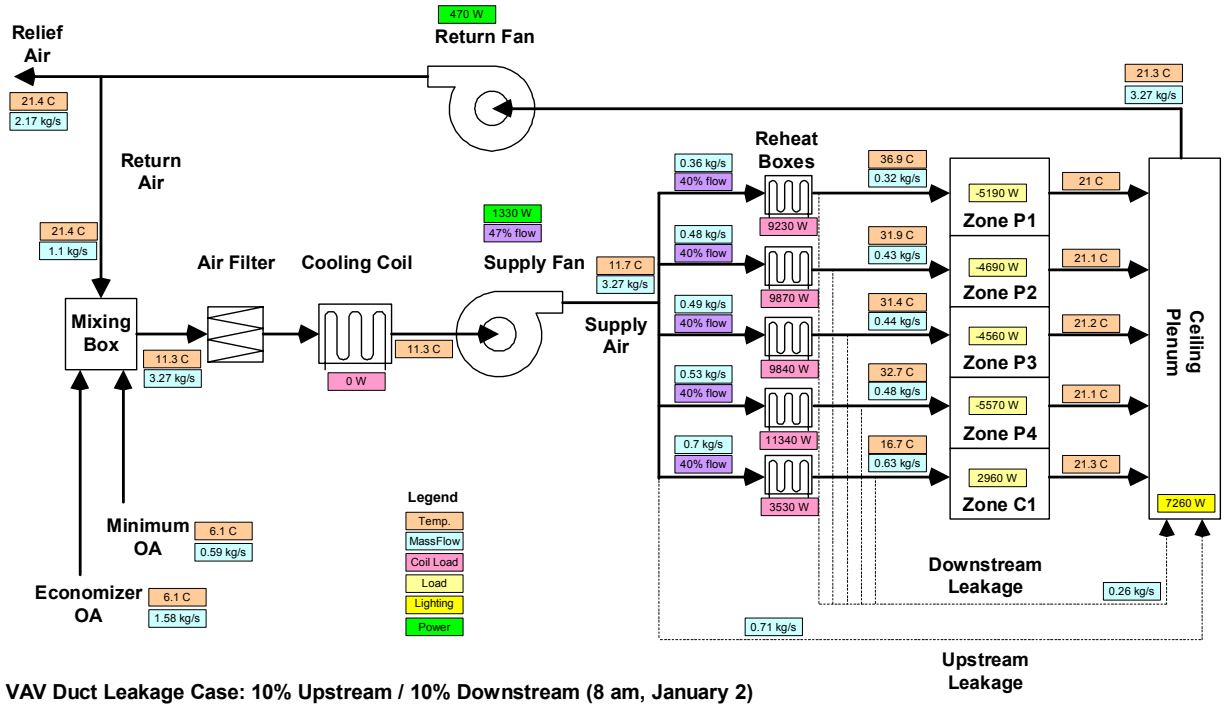

VAV Duct Leakage Case: 10% Upstream / 10% Downstream (8 am, January 2)

Figure 8. Sample TRNSYS Output – Heating Hour

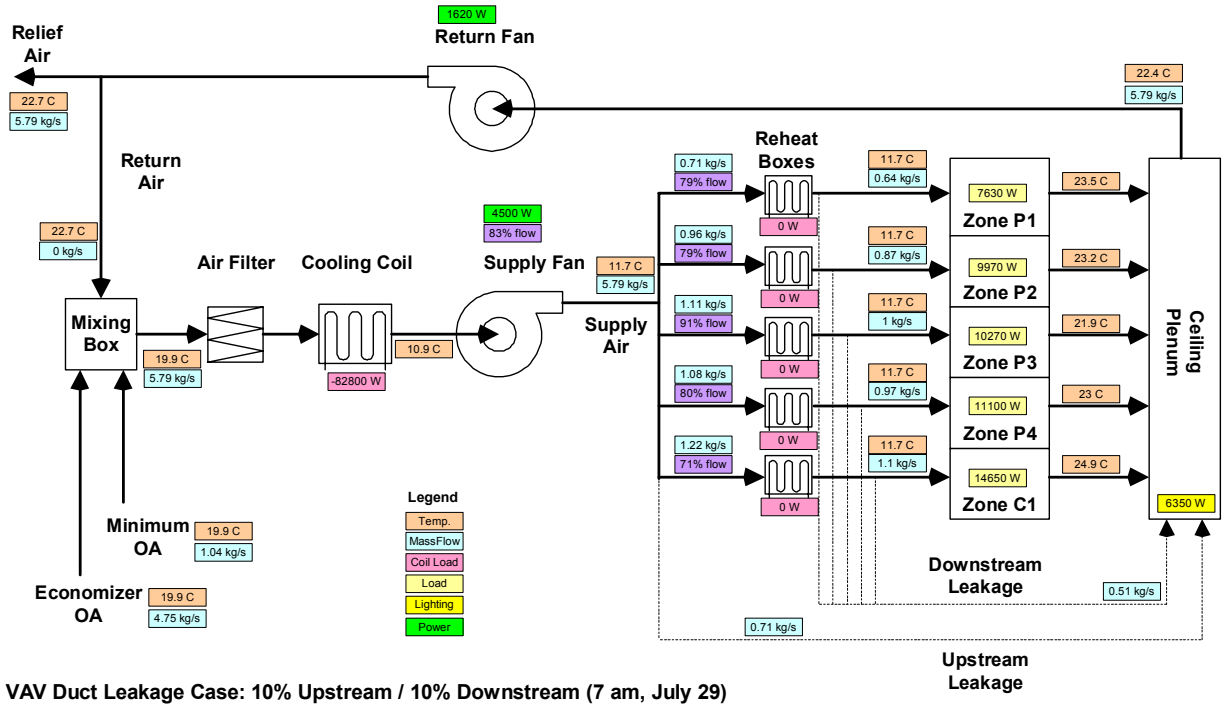

VAV Duct Leakage Case: 10% Upstream / 10% Downstream (7 am, July 29)

Figure 9. Sample TRNSYS Output – Cooling Hour

Dominant Downstream Leakage

The effect on fan power of only increasing the downstream leakage is shown in Figure 10. In this case, the downstream leakage is increased from 2.5% leakage to 10% leakage, while the 2.5% upstream leakage remains unchanged. The total leakage with the increased downstream leakage is about 12%.

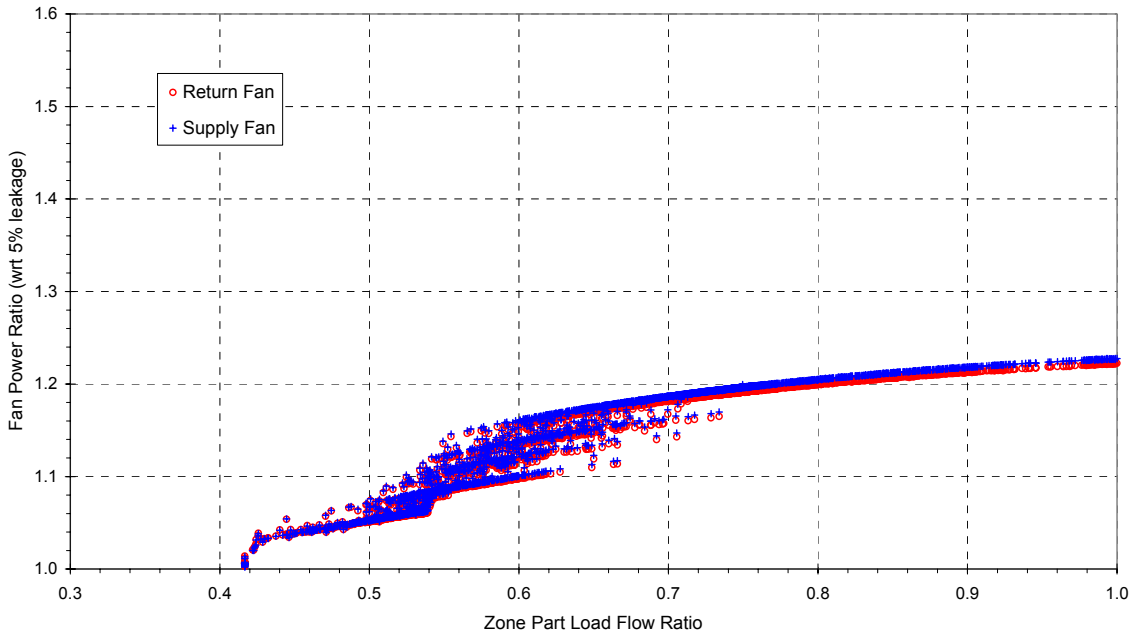

Figure 10. Dominant Downstream Leakage (2.5+10) - Fan Power Impacts

Compared to the tight duct system (5% total leakage) at design conditions (zone part load flow of 1.0), Figure 10 shows that the added downstream leakage increases supply and return fan power about 23%. The fan power increases are reduced as the zone-part-load-flow ratio decreases and, at part loads less than about 0.73, the curves become quite scattered. At the average zone-part-load-flow ratio (0.65), the power increases for both fans are in a broad range of about 11 to 18%. Because the two fans behave similarly, the fractional increase in total fan power is similar to the average fractional increase for the supply and return fans at any particular zone-part-load-flow ratio. The average increase in total fan power for this dominant downstream leakage case is about 14%.

The supply fan power ratios increase as the zone part load flow ratios increase, because as Figure 11 shows, the downstream leakage airflow and therefore supply fan airflows increase more with increasing part load than for the tight duct system (the downstream leakage is a fixed fractional flow, but not a fixed flow rate). Because the return fan mass flow (not shown in Figure 11) is the same as the supply fan mass flow, the return fan power ratios increase in a similar manner.

The scatter at a given zone-part-load-flow ratio occurs because there are some hours when no supply air reheating is needed and all the VAV boxes are supplying more than their minimum turndown flow, and there are other hours at the same zone-part-load-flow ratio when one or more of the zones requires reheat and the corresponding VAV boxes are providing only the minimum turn down flow. In the latter circumstance, because the VAV box airflow is constant, increased leakage flows downstream of these boxes do not increase the supply and return fan airflows, and

therefore the leakage downstream of these boxes does not increase fan power. However, for the other VAV boxes that are not at their minimum turndown, increased leakage flows downstream of these boxes do increase the supply and return fan airflows, and therefore do increase fan power.

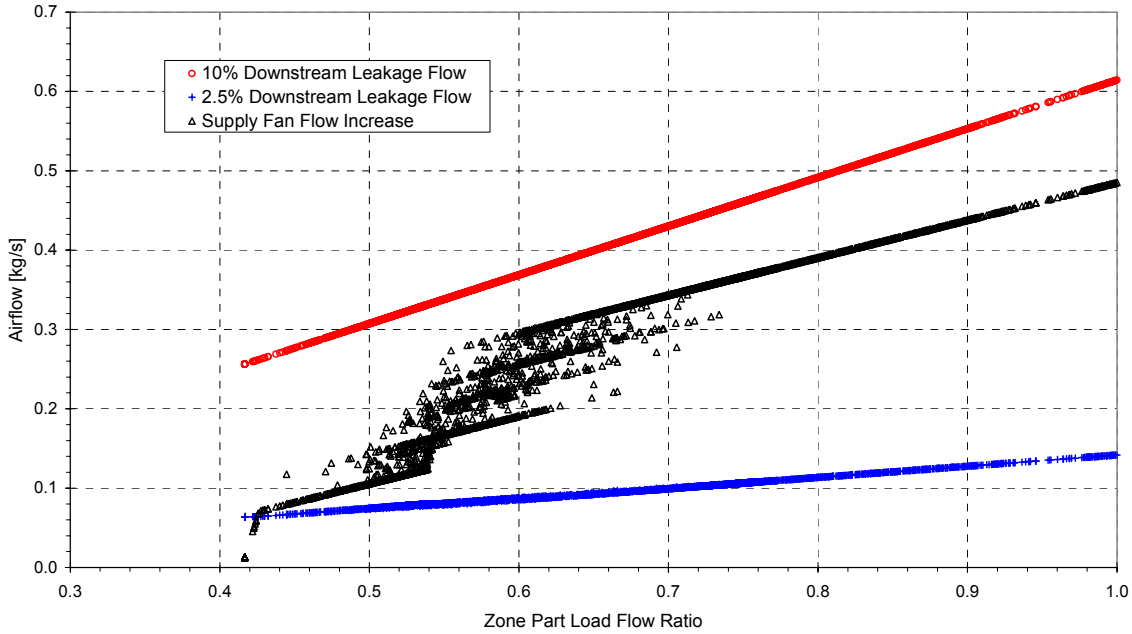

Figure 11. Dominant Downstream Leakage (2.5+10) - Airflow Impacts

To illustrate the behavior when there is some reheating, Figures 12 and 13 show a sample of the performance parameters calculated by TRNSYS for a cooling hour with reheat during January at the average zone-part-load-flow ratio (0.65), for the 2005 Title 24 Sacramento building. Figure 12 shows a tight duct system (about 5% total leakage); Figure 13 shows the same system, but with leaky downstream ducts (about 12% total leakage). In this example, the increase in total fan power with the increased downstream leakage is about 11%.

A positive consequence of downstream duct leakage is that the amount of reheating required will be reduced for the leaky system, because the supply airflows entering the zones with reheat are less than for the tight system and less overcooling will occur due to the airflow entering the zone. This consequence of downstream leakage actually causes system reheat loads to decrease slightly, as shown in Figures 12 and 13 and as noted in the annual energy consumption comparisons discussed in Section 6.2. On the other hand, it is worth noting that some zones do not receive their required minimum outdoor air through the HVAC system for the leaky duct case.

Dominant Upstream Leakage

The effect on fan power of only increasing the upstream leakage is shown in Figure 14. In this case, the upstream leakage is increased from 2.5% leakage to 10% leakage, while the 2.5% downstream leakage remains unchanged. The total leakage with the increased upstream leakage is about 12%.

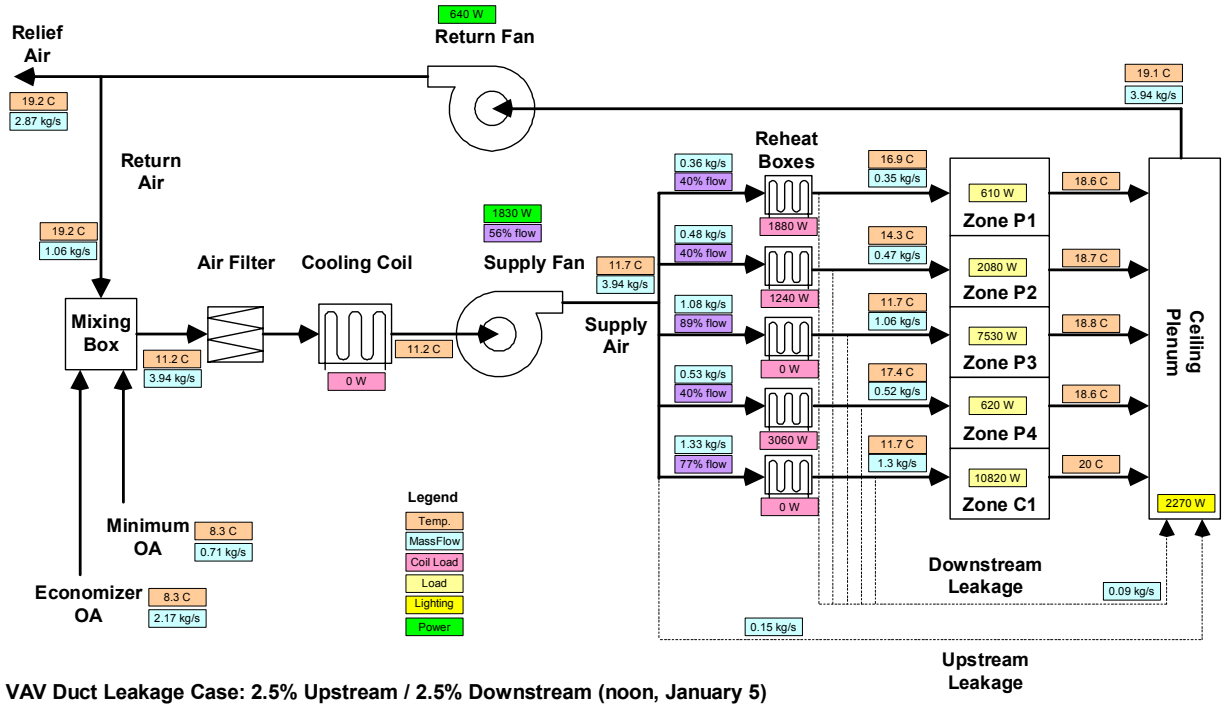

VAV Duct Leakage Case: 2.5% Upstream / 2.5% Downstream (noon, January 5)

Figure 12. Tight Ducts (2.5+2.5) – Cooling Hour with Reheat

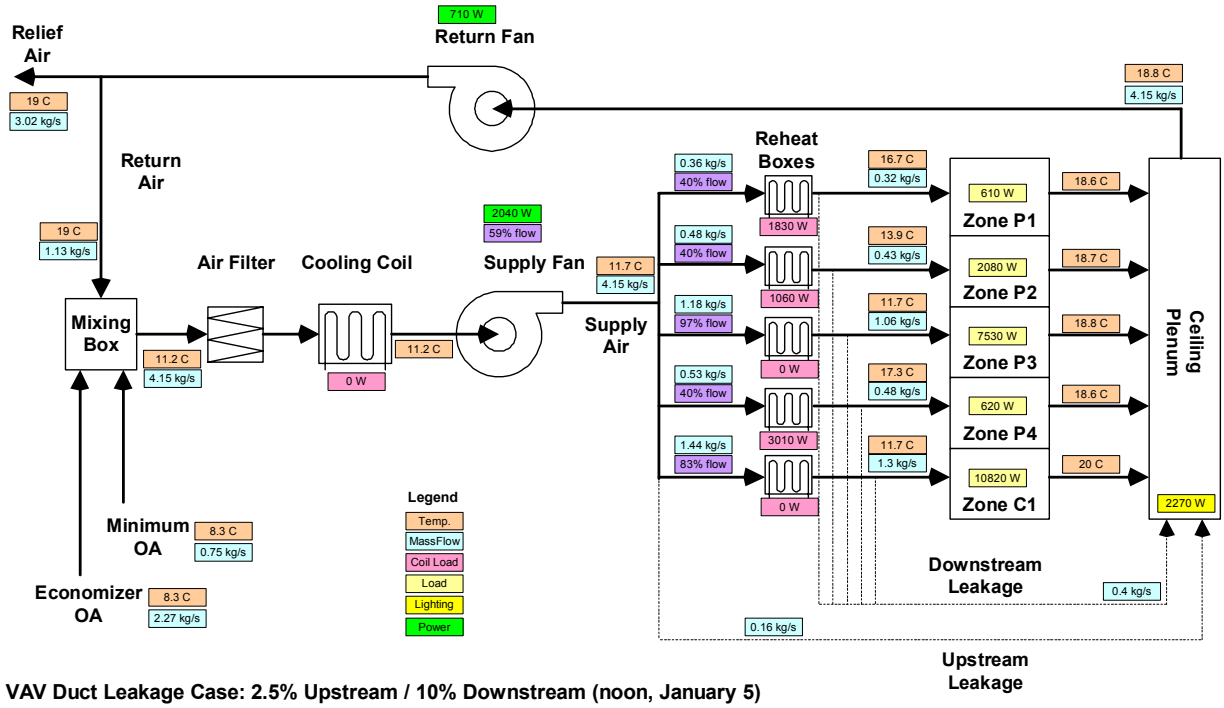

VAV Duct Leakage Case: 2.5% Upstream / 10% Downstream (noon, January 5)

Figure 13. Dominant Downstream Leakage (2.5+10) – Cooling Hour with Reheat

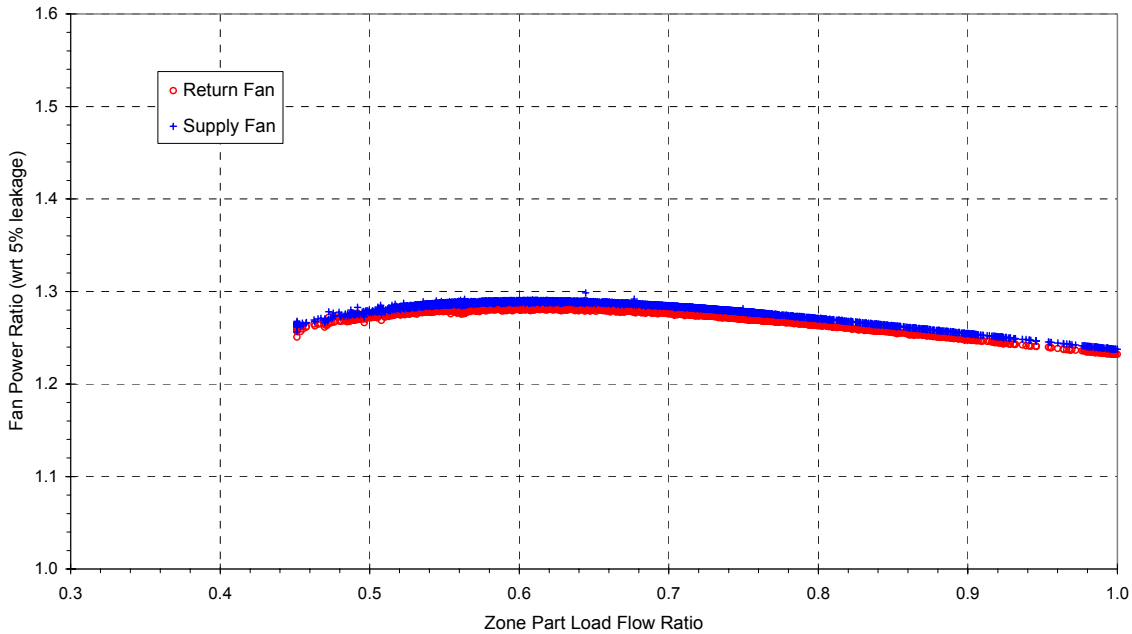

Figure 14. Dominant Upstream Leakage (10+2.5) - Fan Power Impacts

Compared to the tight duct system at design conditions, Figure 14 shows that the added upstream leakage increases supply and return fan power about 24%. At the average zone-part-load-flow ratio (0.66), the power increases about 29% and 28% respectively for the supply and return fans. The average increase in total fan power for this dominant upstream leakage case is about 28%.

The behavior with dominant upstream leakage is very different compared to the behavior for dominant downstream leakage. With a fixed leakage rate, the upstream leakage flow becomes a larger percentage of total airflow at lower zone-part-load-flow ratios. As a result, in the absence of downstream leakage, the fan power ratio would continually increase as the part load was reduced. However, the 2.5% downstream leakage in this case reduces the fan power ratio as the part load reduces, and the net effect is as shown in Figure 14.

Combined Upstream and Downstream Leakage

Figure 15 shows the results for the 10+10 leakage case (about 19% total leakage), which combines the separate effects of dominant upstream leakage and dominant downstream leakage on fan power consumption. Overall, the increase in fan power due to the combined leakage is greater at all zone-part-load-flow ratios in this case than in either the dominant downstream or dominant upstream leakage cases described earlier. Compared to the tight duct system at design conditions, the supply and return fan power increase about 53% and 51% respectively. At the average zone-part-load-flow ratio (0.65), the total fan power increase due to leakage ranges from 45 to 54%. The average increase in total fan power for this combined leakage case is about 50%.

Figures 16 and 17 show the results for the 7.5+7.5 and 5+5 leakage cases (about 14% and 10% total leakage respectively). Compared to the 10+10 case, as the downstream leakage fractions decrease, the scatter decreases significantly; the impact on reheat coil loads also decreases significantly. The average increase in total fan power for these two cases is about 30% and 13% respectively.

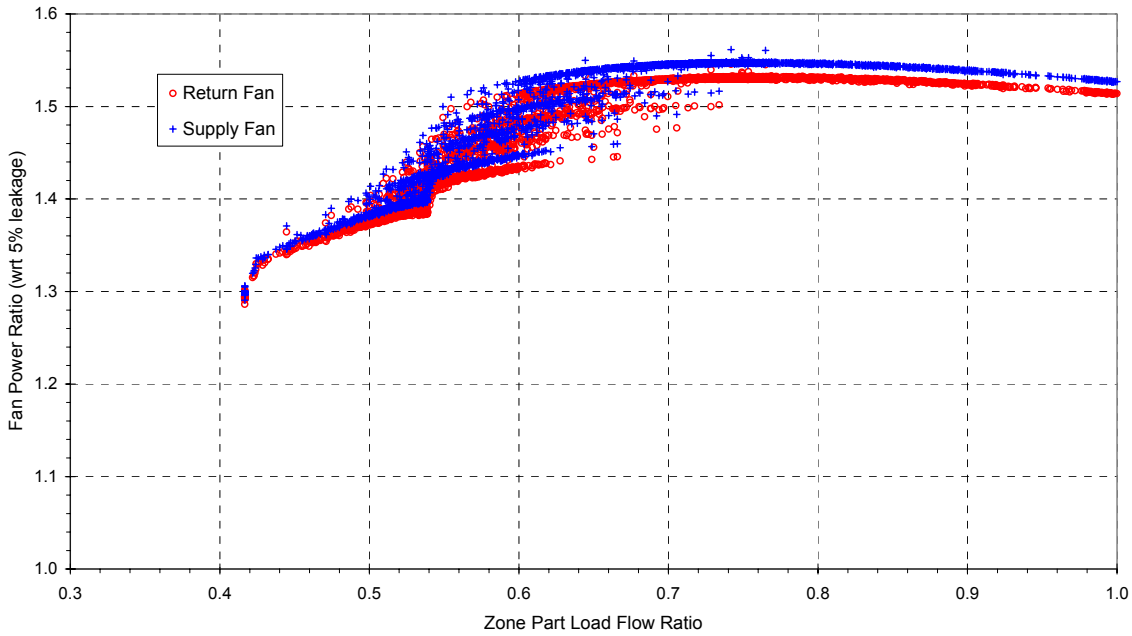

Figure 15. Upstream and Downstream Leaks (10+10) - Fan Power Impacts

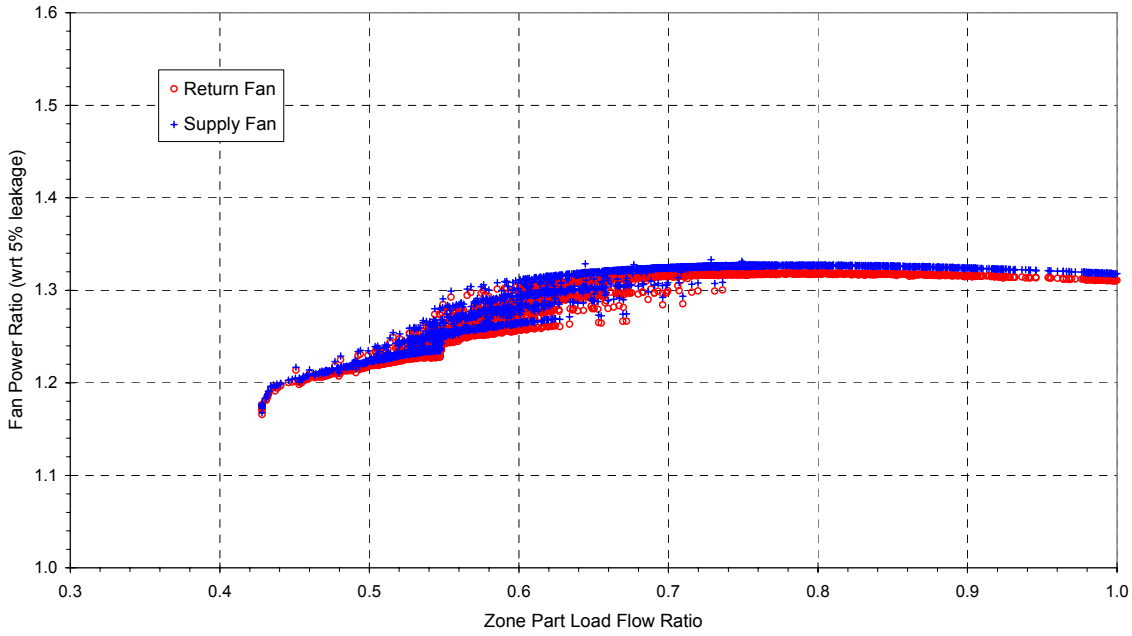

Figure 16. Upstream and Downstream Leaks (7.5+7.5) - Fan Power Impacts

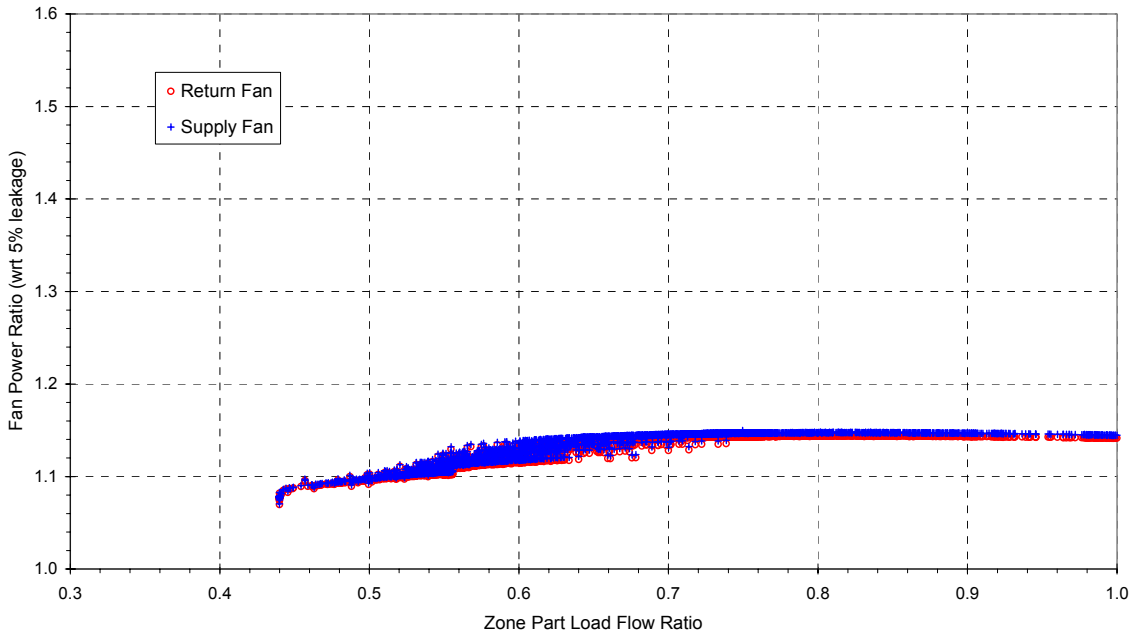

Figure 17. Upstream and Downstream Leaks (5+5) - Fan Power Impacts

6.2 Energy Consumption

Table III-1 in Appendix III summarizes the VAV distribution system energy performance for the 54 cases that we studied; the fractional energy uses by component and the energy increases due to duct leakage are listed in Tables III-2a and III-2b. The total HVAC site energy use reported includes supply and return fan electricity consumption, chiller and cooling tower electricity consumption, boiler electricity consumption, and boiler natural gas consumption. It does not include exhaust fan electricity consumption, which we did not model.

The coil loads listed in Table III-1 are large compared to total fan energy, but do not reflect end-use energy. However, the cooling and reheat coil loads can be related to plant site energy consumption by using the system-to-plant regression equations that we developed. Once this translation from coil loads to plant energy is made, Tables III-2a and III-2b show that annual total energy consumption for supply and return fans ranges from 10 to 25% of the total HVAC system energy consumption (17 to 33% of the total HVAC system electrical energy use). Annual cooling plant energy is the largest energy use component and ranges from 44 to 60% of the total HVAC system energy consumption (65 to 81% of the total HVAC system electrical energy use).

For comparison, California Energy Commission Year 2000 data (Brook 2002) indicate that about 36% of HVAC-related site electricity consumption in California's large commercial buildings is used by supply, return, and exhaust fans. Supply and return fans use about 60% of this fan-related energy, or about 22% of HVAC-related electricity consumption. This latter fraction is consistent with the midpoint of our range (17 to 33%). If we assume that the buildings that we simulated would use exhaust fan energy in the same proportion to supply and return fan energy as indicated by the CEC data, then our 17 to 33% supply and return fan energy fraction means that fans (supply, return, and exhaust) would use about 28 to 55% of HVAC-related electricity consumption.

Of particular interest are the fractional changes in site energy use resulting from duct leakage. These values are presented in the seven right-hand columns of Tables III-2a and III-2b. For 10+10 leakage, total fan energy increases by 40 to 50%. Cooling plant energy also increases (7 to 10%), but reheat energy decreases (3 to 10%). As described in the earlier discussion about dominant downstream leakage (Section 6.1), the reheat energy decreases with duct leakage due to VAV box operation at minimum turn down flows during reheating. In combination, the effect of fan and cooling energy increases (electrical), offset by reheat energy decreases (natural gas), increases total HVAC energy use by 2 to 14% for this case.

Compared to the significant increases in the 10+10 case, the increases are much smaller for 5+5 leakage: total fan energy increases by 10 to 14%, cooling plant energy increases by 2 to 3%, reheat energy decreases by 1 to 4%, and total HVAC energy increases by 0 to 4%.

In almost half the cases, the reheat energy decrease exceeds the corresponding cooling plant energy increase, particularly when downstream leakage is large. In a few cases, added duct leakage actually results in a slight reduction in total HVAC energy use compared to the tight duct case.

6.3 Equipment Sizing Considerations

An additional effect that duct leakage has on system performance is to increase the required size of system components. Tables IV-1a and IV-1b in Appendix IV summarize the maximum fan, VAV box, and zone airflows and the peak coil loads that occur over the annual simulation for the 54 cases that we analyzed. The impacts of duct leakage are presented in the four right-hand columns (fan airflows, VAV box airflows, and coil sizes), relative to the tight leakage case.

The fan size requirement increases by about 16 to 21% for 10+10 leakage. Both cooling and reheat coil size requirements increase: 7 to 12% for the cooling coil, and 2 to 6% for the reheat coils. Compared to the significant increases in the 10+10 case, the equipment size increases are much smaller for 5+5 leakage: 5 to 6% for the supply fan, 2 to 3% for the cooling coil, and 1 to 2% for the reheat coil.

The size increases (especially for the 10+10 case) are important because they translate into increased equipment capital costs, which are in addition to the increased energy operating costs described below.

6.4 HVAC System Operating Costs

Using our system-to-plant energy regression equations with energy cost data enables us to extend the simulation results to estimate duct leakage impacts on HVAC system operating costs. In particular, we calculated annual operating costs using year 2000 average commercial sector energy prices for California: $0.0986/kWh and $7.71/Million Btu (EIA 2003). These prices include demand charges, averaged over the total consumption for the year. In the discussion that follows, we ignored the separate effects of energy demand changes on demand charges. If demand charges were included, we expect that the actual operating cost increases would be larger than those reported here, because the largest fractional increases in energy use coincide with medium to full load operation of the HVAC system.

It is important to note that, because electrical energy costs much more (a factor of 3.7) than natural gas per unit of energy, the energy prices change the weighting of the energy contributions to the operating cost increases. Consequently, even the low total HVAC energy increases described in Section 6.2 still result in substantial cost increases in all but a few cases.

Tables V-1a and V-1b in Appendix V present our estimates of HVAC system annual operating costs for the various leakage cases, along with the changes in cost relative to the tight duct case. The combined chiller and cooling tower operating cost increase is equal to about half of the combined supply and return fan cost increase. Including the cost decreases associated with the heating plant, the total plant energy cost increase equals about one-third of the fan cost increase. For the 10+10 leakage case, HVAC system annual operating costs increase by 9 to 18% ($7,400 to $9,500) relative to the tight duct case. The increase for 5+5 leakage is 2 to 5% ($1,800 to $2,700).

The fractional and absolute cost increases do not necessarily correspond with each other, because the operating costs differ depending on building location and construction. For example, in the 10+10 leakage case, Tables V-1a and V-1b show that the 9% fractional cost increase is achieved by a $7,500 increase relative to an $87,000 "tight duct" operating cost ("new" Pasadena CZ9 building); the 18% fractional cost increase is achieved by an $8,200 increase relative to a $44,600 operating cost ("Title 24" Oakland CZ3 building). The $7,400 absolute cost increase is relative to a $63,300 operating cost ("Title 24" Pasadena CZ9 building) and corresponds to a fractional increase of about 12%; the $9,500 absolute increase is relative to a $77,300 operating cost ("old" Sacramento CZ12 building) and also corresponds to a fractional increase of about 12%.

6.5 Duct Sealing Cost Effectiveness

Figure 18 shows the range of increases in HVAC system annual operating costs due to leakage for all climates and building vintages, relative to the tight duct system (about 5% total leakage).

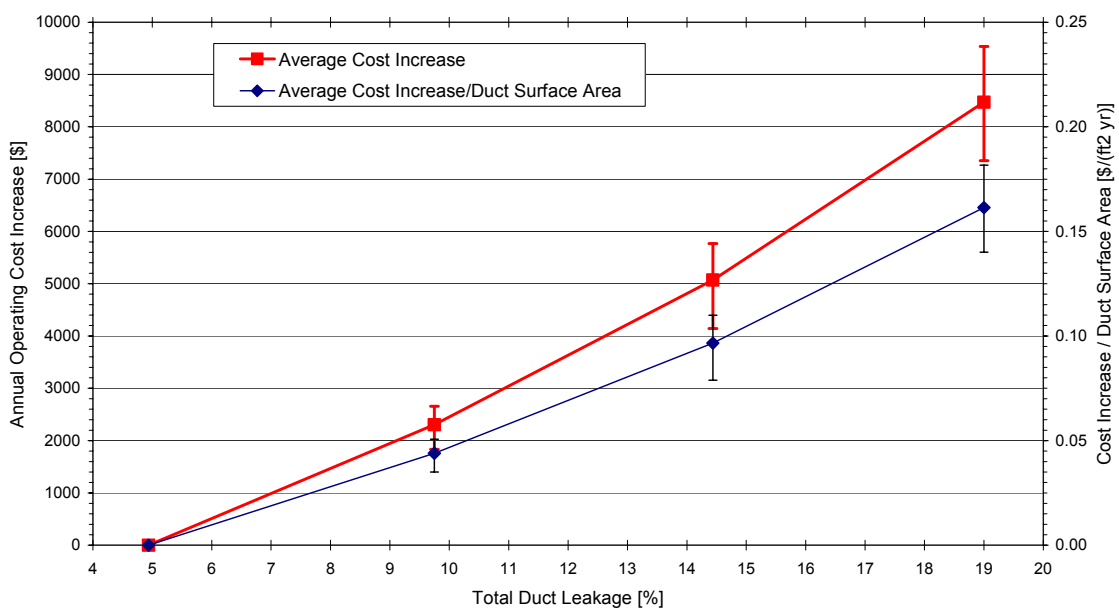

Figure 18. Duct Leakage Impacts on Annual HVAC Operating Costs

The values shown in Figure 18 assume that each floor's HVAC system, which serves 15,000 ft^2 of conditioned floor area, has a duct surface area of 5,250 ft^2. This surface area is based on commercial duct characterization data (Fisk et al. 2000). For large commercial HVAC systems, duct surface area ranges from 27 to 43% of the building floor area, and the area downstream of

the VAV boxes ranges from 50 to 75% of the total duct surface area. Using typical ratios of 35% for the duct to floor area and 60% for the downstream duct area fraction, the duct surface area is 2,100 ft^2 upstream and 3,150 ft^2 downstream. Based on the total duct surface area (5,250 ft^2), the operating costs compared to the tight system increase by 0.03 to 0.05 $/$ft^2$ for the 5+5 leakage case, 0.08 to 0.11 $/$ft^2$ for the 7.5+7.5 case, and 0.14 to 0.18 $/$ft^2$ for the 10+10 leakage case.

Duct sealing costs vary with fitting-to-straight-duct ratio, pressure class, and other system variables. Tsal et al. (1998) have suggested that an upper bound for the one-time cost of duct sealing is $0.25/$ft^2$ of duct surface area. SMACNA has suggested that a reasonable average sealing cost is $0.20/$ft^2$ for new commercial installations (Stratton 1998). SMACNA could not provide a sealing cost estimate for retrofitting existing systems due to wide cost variations resulting from system variables and sealing methods.

Assuming a one-time duct sealing cost of $0.20/$ft^2$, the average simple payback for the duct sealing is 5 years for the 5+5 leakage case, 2 years for the 7.5+7.5 case, and 1.3 years for the 10+10 leakage case.

7. CONCLUSIONS

Our DOE-2/TRNSYS simulations indicate that a leaky VAV system (total leakage of about 19%) will use about 40 to 50% more fan energy annually than a tight system (about 5% leakage). Annual cooling plant energy also increases by about 7 to 10%, but reheat energy decreases (about 3 to 10%). In combination, the increase in total annual HVAC site energy is 2 to 14%. The total HVAC site energy use includes supply and return fan electricity consumption, chiller and cooling tower electricity consumption, boiler electricity consumption, and boiler natural gas consumption.

Using year 2000 average commercial sector energy prices for California ($0.0986/kWh and $7.71/Million Btu), the energy increases result in HVAC system annual operating cost increases ranging from 9 to 18% ($7,400 to $9,500). The low increases in total energy correspond to cases with large reductions in natural-gas-based reheat energy consumption due to the added leakage; the reheat reductions tend to offset the large electrical-based fan and cooling plant energy increases due to the added leakage. However, because electrical energy costs much more than natural gas per unit of energy, even the low total energy increases still result in substantial cost increases.

Normalized by duct surface area, the increases in HVAC system annual operating costs are 0.14 to 0.18 $/$ft^2$ for the 19% leakage case. Using a suggested one-time duct sealing cost of $0.20/$ft^2$ of duct surface area, these results indicate that sealing leaky ducts in VAV systems has a simple payback period of about 1.3 years. Even with total leakage rates as low as 10%, duct sealing is still cost effective. This suggests that duct sealing should be considered at least for VAV systems with 10% or more total duct leakage.

8. OTHER ISSUES AND IMPLICATIONS

Before duct performance in large commercial buildings can be accounted for in Title 24 nonresidential building energy standards, there are several issues that must be addressed and resolved. These include:

1. Specifying reliable duct air leakage measurement techniques that can be practically applied in the large commercial building sector.

2. Defining the duct leakage condition for the standard building used in Title 24 compliance simulations.
3. Assuring consistency between simulated duct performance impacts and actual impacts.
4. Developing compliance tests for the Alternative Calculation Method (ACM) Approval Manual (CEC 2001b) to evaluate duct performance simulations.

Regarding Issues 1 and 2, new duct air leakage measurement techniques for large commercial buildings are already under development at LBNL. These efforts are focused on developing a rapid technique that measures leakage flows rather than leakage area, and we expect that it could be used to populate a database of duct leakage conditions in the existing building stock.

After the "typical" duct leakage for the building stock is defined, then a decision can be made about what duct leakage level to assign to the standard building. If the standard building description includes a typical duct air leakage rate, then proposed buildings will be rewarded for sealing ducts. If instead the standard building has a reduced leakage level, proposed buildings that are not sealed will be penalized. The decision about what leakage level to assume for the standard building description will depend upon the preparedness of the market to handle required duct efficiency improvements, as opposed to optional improvements.

In terms of prescriptive compliance options, if the standard-building duct performance parameters are established to correspond to typical duct air leakage, determining compliance using the prescriptive approach is straightforward. If the proposed building has a typical duct air leakage level and has ducts insulated to Title 24 requirements, the building complies with respect to ducts. In other words with nothing done to improve duct performance in the building, it would meet the minimal duct performance level in this case. On the other hand, if the standard building has tighter-than-typical duct air leakage specifications, then compliance would require either performance measurements (i.e., duct air leakage measurements), or increased energy efficiency of other building components.

With the standard building defined as having leaky ducts, improving the duct performance in the proposed building affects compliance only if the performance budget approach is used. If leaks are sealed as a compliance conservation measure, standardized testing methods must be adopted for the verification of reduced leakage rates. Leakage rates determined from the tests would be part of the duct performance input data in the performance compliance analysis for the proposed building.

For Issue 3, one study has already shown through detailed minute-by-minute field measurements in a large commercial building that duct leakage has a significant impact on HVAC system performance (Diamond et al. 2003). The extensive set of HVAC system performance data collected by Diamond et al. could be used to validate simulation tools that are used to predict the duct performance impacts.

Regarding Issue 4, several tests must be performed already on alternative calculation methods before they are approved. Although a test does not yet exist, the proper modeling of duct performance in these alternative methods should be evaluated as part of these capability tests. Given that the current two certified nonresidential compliance tools depend upon DOE-2.1E as the reference evaluation program, and that DOE-2.1E cannot properly account for duct thermal performance, it is expected that results obtained using an alternative calculation method that properly accounts for duct thermal performance might differ substantially from the reference program results. Thus, we recommend that a new reference program be identified for use at least

in this test (e.g., EnergyPlus). A prerequisite in this case is that the reference method be appropriately validated against field measurements.

Three additional steps will be required to further develop duct-modeling capabilities that address limitations in existing models and to initiate strong market activity related to duct system improvements. We recommend that these steps include:

1. Implementing duct models in user-friendly commercially-available software for building energy simulation, validating the implementations with case studies and demonstrations, and obtaining certification for software use as a primary or alternative compliance tool in support of the Title 24 Nonresidential Standards.
2. Developing methodologies to deal with airflows entering VAV boxes from ceiling return plenums (e.g., to model parallel fan-powered VAV boxes), to deal with duct surface heat transfer effects, and to deal with static pressure reset and supply air temperature reset strategies.
3. Transferring information to practitioners through publications, conferences, workshops, and other education programs.

GLOSSARY

ACM	Alternative Calculation Method
ASHRAE	American Society of Heating, Refrigerating, and Air-Conditioning Engineers
CAV	Constant Air Volume
CEC	California Energy Commission
DOE	U.S. Department of Energy
EDS	Efficient Distribution Systems
EIA	Energy Information Administration
GWh	Giga Watt hours, 10^9 Wh, 10^6 kWh
HVAC	Heating, ventilating, and air conditioning
LBNL	Lawrence Berkeley National Laboratory
MW	Mega Watt, 10^6 W
PIER	Public Interest Energy Research
SMACNA	Sheet Metal and Air Conditioning Contractors' National Association
VAV	Variable Air Volume

REFERENCES

1. Brandemuehl, M.J., S. Gabel, and I. Andresen. 1993. "*HVAC 2 Toolkit: Algorithms and Subroutines for Secondary HVAC System Energy Calculations*". American Society of Heating, Refrigerating and Air-Conditioning Engineers, Inc.
2. Brook, M. 2002. "*California Electricity Outlook: Commercial Building Systems*". Presentation at PIER Buildings Program HVAC Diagnostics Meeting, Oakland, CA. April 16.

3. CEC. 2001a. "*Nonresidential Manual for Compliance with the 2001 Energy Efficiency Standards (for Nonresidential Buildings, High-Rise Residential Buildings, and Hotels/Motels)*". California Energy Commission, P400-01-023, August.

4. CEC. 2001b. "*Alternative Calculation Method (ACM) Approval Manual for the 2001 Energy Efficiency Standards for Nonresidential Buildings*". California Energy Commission, P400-01-011, April.

5. CEC. 2003a. "*2005 Building Energy Efficiency Standards – Standards for Residential and Nonresidential Buildings*". Consultant Draft Report, Workshop Draft 3, P400-03-001D3, February.

6. CEC. 2003b. "*2005 Building Energy Efficiency Standards - Nonresidential ACM Manual - Workshop Draft*". California Energy Commission, P400-03-004D, February 4.

7. Diamond, R., C. Wray, D. Dickerhoff, N. Matson, and D. Wang. 2003. "*Thermal Distribution Systems in Commercial Buildings*". Lawrence Berkeley National Laboratory Report, LBNL-51860.

8. EIA. 2003. "*State Energy Data 2000 Price and Expenditure Data*". Energy Information Agency, U.S. Department of Energy.

9. EIA. 2002. "*1999 Commercial Buildings Energy Consumption Survey - Detailed Tables*". Energy Information Administration, U.S. Department of Energy. August. http://www.eia.doe.gov/emeu/cbecs/pdf/alltables.pdf

10. Fisk, W.J., W. Delp, R. Diamond, D. Dickerhoff, R. Levinson, M. Modera, M. Nematollahi, and D. Wang. 2000. "*Duct Systems in Large Commercial Buildings: Physical Characterization, Air Leakage, and Heat Conduction Gains*". Energy and Buildings, Vol. 32, No. 1. LBNL-42339.

11. Franconi, E., W. Delp, and M. Modera. 1998. "*Impact of Duct Air-Leakage on VAV System Energy Use*". Lawrence Berkeley National Laboratory Draft Report. LBNL-42417.

12. Franconi, E.M. 1999. "*Thermodynamic Analysis for Improved HVAC Distribution System Performance*". Ph.D. Dissertation, Department of Civil, Environmental, and Architectural Engineering, University of Colorado, Boulder.

13. Grot, R.A. and A.K. Persily. 1986. "*Measured Air Infiltration and Ventilation Rates in Eight Large Office Buildings*". American Society for Testing and Materials. ASTM STP 904, Measured Air leakage of Buildings, H.R. Treschel and P.L. Lagus, eds.

14. Huang, Y.J. 2003. Personal Communication. Lawrence Berkeley National Laboratory.

15. Huang, J. and E. Franconi. 1999. "*Commercial Heating and Cooling Loads Component Analysis*". Lawrence Berkeley National Laboratory Report, LBL-37208.

16. Klein, S.A., W.A. Beckman, J.W. Mitchell, J.A. Duffie, N.A. Duffie, T.L. Freman, J.C. Mitchell, J.E. Braun, B.L. Evans, J.P. Kummer, R.E. Urban, A. Fiskel, and J.W. Thornton. 1996. "*TRNSYS: A Transient System Simulation Program*". Solar Energy Laboratory, University of Wisconsin-Madison. Version 14.2.

17. Knebel, D.E. 1983. "*Simplified Energy Analysis using the Modified Bin Method*". Atlanta: American Society of Heating, Refrigerating and Air-Conditioning Engineers, Inc.

18. Kreider, J.F. and A. Rabl. 1994. "*Heating and Cooling of Buildings: Design for Efficiency*". New York: McGraw-Hill.

19. Modera, M.P. 2002. "*Proposed Revisions to 2005 Title 24 Energy Efficiency Standards: Addition of HVAC Transport Efficiency Concept*". Memorandum to the California Energy Commission. October 31.

20. Modera, M. T. Xu, H. Feustel, N. Matson, C. Huizenga, F. Bauman, E. Arens, and T. Borgers. 1999. "*Efficient Thermal Energy Distribution in Commercial Buildings*". Lawrence Berkeley National Laboratory Report to California Institute for Energy Efficiency, LBNL-41365. August.

21. Pedersen, C.O., D.E. Fisher, J.D. Spitler, and R.J. Liesen. 1998. "*Cooling and Heating Load Calculation Principles*". Atlanta: American Society of Heating, Refrigeration, and Air-Conditioning Engineers, Inc.

22. Pietsch, J.A. 1991. "*Water-Loop Heat Pump Systems: Assessment Study Update*". Electric Power Research Institute, EPRI- CU- 7535, Project 2480- 2, Final Report.

23. Stratton, J.H. 1998. Personal Communication. Director of Technical Services, SMACNA, Chantilly, VA. October 1.

24. Tsal, R.J., H.F. Behls, and L.P. Varvak. 1998. "*T-Method Duct Design: Part V: Duct Leakage Calculation Technique and Economics*". ASHRAE Transactions, V. 104, Pt. 2. American Society of Heating, Refrigerating and Air-Conditioning Engineers, Inc.

25. Winkelmann, F.C., B.E. Birdsall, W.F. Buhl, K.L. Ellington., and A.E. Erdem. 1993a. "*DOE-2 BDL Summary Version 2.1E*". LBNL-34946. Berkeley, Calif.: Lawrence Berkeley National Laboratory.

26. Winkelmann, F., B. Birdsall, F. Buhl, K. Ellington, E. Erdem, J. Hirsch, and S. Gates. 1993b. "*DOE-2 Supplement, Version 2.IE*". Lawrence Berkeley National Laboratory, LBL-34947, November. Also Springfield, Virginia: National Technical Information Service.

27. Xu, T., O. Bechu, R. Carrié, D. Dickerhoff, W. Fisk, E. Franconi, Ø. Kristiansen, R. Levinson, J. McWilliams, D. Wang, M. Modera, T. Webster, E. Ring, Q. Zhang, C. Huizenga, F. Bauman, and E. Arens. 1999. "*Commercial Thermal Distribution Systems*". Lawrence Berkeley National Laboratory Report to the California Institute for Energy Efficiency and the California Energy Commission. LBNL-44320. December.

28. Wray, C.P. 2003. "*Duct Thermal Performance Models for Large Commercial Buildings*". Lawrence Berkeley National Laboratory Report. LBNL-53410.

APPENDIX I: BUILDING SCHEDULES

Table I-1. Heating Set-Point Schedule (°F)

Weekday			Saturday			Sunday			Holiday		
Start (Hr)	Stop (Hr)	Value	Start (Hr)	Stop (Hr)	Value	Start (Hr)	Stop (Hr)	Value	Start (Hr)	Stop (Hr)	Value
1	5	60	1	5	60	1	5	60	1	5	60
6	7	65	6	16	65	6	16	65	6	16	65
8	18	70	17	24	60	17	24	60	17	24	60
19	19	65									
20	24	60									

Table I-2. Cooling Set-Point Schedule (°F)

Weekday			Saturday			Sunday			Holiday		
Start (Hr)	Stop (Hr)	Value	Start (Hr)	Stop (Hr)	Value	Start (Hr)	Stop (Hr)	Value	Start (Hr)	Stop (Hr)	Value
1	5	77	1	5	77	1	5	77	1	5	77
6	18	73	6	18	73	6	18	73	6	18	73
19	24	77	19	24	77	19	24	77	19	24	77

Table I-3. Lighting Schedule (Fraction of Full Intensity)

Weekday			Saturday			Sunday			Holiday		
Start (Hr)	Stop (Hr)	Value	Start (Hr)	Stop (Hr)	Value	Start (Hr)	Stop (Hr)	Value	Start (Hr)	Stop (Hr)	Value
1	4	5%	1	5	5%	1	5	5%	1	5	5%
5	5	10%	6	6	10%	6	7	10%	6	7	10%
6	6	20%	7	7	15%	8	17	15%	8	17	15%
7	7	40%	8	14	25%	18	20	10%	18	20	10%
8	8	70%	15	17	20%	21	24	5%	21	24	5%
9	9	80%	18	18	15%						
10	17	85%	19	24	10%						
18	18	80%									
19	19	35%									
20	24	10%									

Table I-4. Equipment Heat Gain Schedule (Fraction of Full Load)

Weekday			Saturday			Sunday			Holiday		
Start (Hr)	Stop (Hr)	Value	Start (Hr)	Stop (Hr)	Value	Start (Hr)	Stop (Hr)	Value	Start (Hr)	Stop (Hr)	Value
1	5	15%	1	7	15%	1	7	15%	1	7	15%
6	6	20%	8	8	20%	8	17	20%	8	17	20%
7	7	35%	9	14	25%	18	24	15%	18	24	15%
8	8	60%	15	17	20%						
9	16	70%	18	24	15%						
17	17	65%									
18	18	45%									
19	19	30%									
20	21	20%									
22	24	15%									

Table I-5. Air-Handler Operating Schedule (Supply and Return Fans)

HVAC Fan (On/Off)											
Weekday			Saturday			Sunday			Holiday		
Start (Hr)	Stop (Hr)	Value	Start (Hr)	Stop (Hr)	Value	Start (Hr)	Stop (Hr)	Value	Start (Hr)	Stop (Hr)	Value
1	5	Off	1	5	Off	1	24	Off	1	24	Off
6	20	On	6	15	On						
21	24	Off	16	24	Off						

Table I-6. Air Infiltration Schedule (Fraction of Full Infiltration Airflow)

Infiltration (%)											
Weekday			Saturday			Sunday			Holiday		
Start (Hr)	Stop (Hr)	Value	Start (Hr)	Stop (Hr)	Value	Start (Hr)	Stop (Hr)	Value	Start (Hr)	Stop (Hr)	Value
1	5	100%	1	5	100%	1	24	100%	1	24	100%
6	20	0%	6	15	0%						
21	24	100%	16	24	100%						

Table I-7. Occupancy Schedule (Fraction of Full Occupancy)

People (%)											
Weekday			Saturday			Sunday			Holiday		
Start (Hr)	Stop (Hr)	Value	Start (Hr)	Stop (Hr)	Value	Start (Hr)	Stop (Hr)	Value	Start (Hr)	Stop (Hr)	Value
1	4	0%	1	6	0%	1	7	0%	1	7	0%
5	5	5%	7	7	5%	8	20	5%	8	20	5%
6	6	10%	8	17	15%	21	24	0%	21	24	0%
7	7	25%	18	20	5%						
8	11	65%	21	24	0%						
12	13	60%									
14	17	65%									
18	18	40%									
19	19	25%									
20	20	10%									
21	24	5%									

APPENDIX II: REGRESSION EQUATIONS AND COEFFICIENTS

This Appendix lists the plant energy regression equations and their coefficients that we developed to translate the intermediate floor cooling and heating coil loads (predicted by the TRNSYS air-handling system simulations) to plant energy consumption and demand (i.e., chiller electricity, cooling tower electricity, boiler electricity, and boiler fuel).

Each equation correlates the energy demand predicted by DOE-2 in a given hour to the intermediate floor part load factor for that hour (PLRC for cooling, PLRH for heating). The part load factor is defined as the hourly coil load (summed over all zones on a floor, or over all zones in the building) divided by the maximum hourly coil load over all operating hours (summed over the corresponding floor or the entire building respectively).

Tables II-1a through II-2b demonstrate that the part load ratio for a single intermediate floor can be used to represent the part load ratio for the entire building. Therefore, we used the PLR's based on a single mid-height intermediate floor to translate the coil loads to plant energy consumption and demand.

Table II-1a. Cooling Part Load Ratio Equation (PLRC)

PLRC(Building) = A x PLRC(Intermediate Floor)

R^2 Range: 1.000

Climate Zone	Building	A
CZ3 (Oakland)	1980	0.994
	1990	0.995
	2005	0.995
CZ9 (Pasadena)	1980	1.005
	1990	1.002
	2005	0.997
CZ12 (Sacramento)	1980	0.996
	1990	0.996
	2005	0.997

Table II-1b. Cooling Part Load Ratio - Example Values

Cooling Part Load Ratio (Intermediate Floor)	Predicted Cooling Part Load Ratio (Whole Building)
0	0
0.1	0.099
0.5	0.497

Table II-2a. Heating Part Load Ratio Equation (PLRH)

PLRH(Building) = A x PLRH[Intermediate Floor] + B x PLRH[Intermediate Floor]^2

R^2 Range: 0.9999 to 1.000

Climate Zone	Building	A	B
CZ3 (Oakland)	1980	0.984	0.020
	1990	0.981	0.020
	2005	0.980	0.026
CZ9 (Pasadena)	1980	0.964	0.037
	1990	0.964	0.036
	2005	0.953	0.046
CZ12 (Sacramento)	1980	0.978	0.026
	1990	0.977	0.026
	2005	0.971	0.035

Table II-2b. Heating Part Load Ratio - Example Values

Heating Part Load Ratio (Intermediate Floor)	Predicted Heating Part Load Ratio (Whole Building)
0	0
0.1	0.099
0.5	0.497

Each cooling equation that follows in Tables II-3a, II-3b, and II-4a represents the dimensional function f(PLR) that is used in the following relation:

$$\text{Hourly Energy Demand} = (\text{TRNSYS Load}_{\text{max, 10+10}})/(\text{DOE-2 Load}_{\text{max}}) * f(\text{PLRC})$$

where

"TRNSYS $\text{Load}_{\text{max, 10+10}}$" is the *maximum* hourly cooling coil total load (sensible plus latent) determined using TRNSYS for the selected intermediate floor over all operating hours in the simulation case for the specified climate and building vintage combination, for the case with the maximum duct leakage (which requires the largest fans and coils), and

"DOE-2 Load_{max}" is the *maximum* hourly cooling coil total load determined using DOE-2 for the same floor, climate, and building vintage case.

The ratio of the TRNSYS and DOE-2 coil loads serves as a correction to account for different equipment sizes. Specifically, we assume that plant size scales linearly with coil size. This means that an air-handling system with duct leakage (simulated by TRNSYS) that uses a cooling coil 50% larger than the one used in the associated DOE-2 simulation (with no duct leakage) will result in 50% more chiller and cooling tower electricity being consumed at a given part load.

In the equation above, the parameter PLRC is the *hourly* coil part load factor determined using the hourly and maximum cooling coil loads from TRNSYS for the same floor, climate, and building vintage case:

$$PLRC_{hour} = TRNSYS\ Load_{hour} / TRNSYS\ Load_{max,\ 10+10}$$

The $PLRC_{hour}$ relation assumes that the same size fans and coils are used within a given climate and building vintage set of cases regardless of the leakage condition, and that the equipment sizes in those cases are based on the sizes required to meet the loads in the maximum leakage condition.

A similar set of relations is used with the heating equations in Tables II-5a, II-5b, II-6a, and II-6b, which depend on PLRH rather than PLRC.

Table II-3a. Chiller Electricity Equation - Low PLRC

(PLRC[Intermediate Floor] <=~0.09)

Chiller Electricity (Building, kW) = A + B x PLRC[Intermediate Floor]

R^2 Range: 0.9999 to 1.0000

Climate Zone	Building	PLRC<=	A	B
CZ3 (Oakland)	1980	0.089	9.185	426.201
	1990	0.089	8.938	415.787
	2005	0.091	7.310	335.231
CZ9 (Pasadena)	1980	0.086	12.395	602.760
	1990	0.091	12.088	549.800
	2005	0.097	10.283	438.590
CZ12 (Sacramento)	1980	0.093	13.158	592.039
	1990	0.093	12.684	566.690
	2005	0.095	9.890	435.552

Table II-3b. Chiller Electricity Equation - High PLRC

(PLRC[Intermediate Floor] >~ 0.09)

Chiller Electricity (Building, kW) =
A + B x PLRC[Intermediate Floor] + C x PLRC[Intermediate Floor]^2

R^2 Range: 0.9997 to 0.9998

Climate Zone	Building	PLRC>	A	B	C
CZ3 (Oakland)	1980	0.089	41.674	54.981	65.847
	1990	0.089	40.672	53.564	63.780
	2005	0.091	33.277	43.117	50.759
CZ9 (Pasadena)	1980	0.086	56.763	74.223	101.610
	1990	0.091	55.621	66.529	87.714
	2005	0.097	47.259	52.271	68.044
CZ12 (Sacramento)	1980	0.093	60.760	69.440	97.390
	1990	0.093	58.561	66.482	92.559
	2005	0.095	45.499	51.773	69.780

Table II-3c. Chiller Electricity Consumption - Example Values

Cooling Part Load Ratio (Intermediate Floor)	Predicted Chiller Electricity Consumption (kW) (Whole Building)
0	0
0.08	43.3
0.50	85.6

Table II-4a. Cooling Tower Electricity Equation

Cooling Tower Electricity (Building, kW) =
A + B x PLRC[Intermediate Floor] + C x PLRC[Intermediate Floor]^2 +
D x PLRC[Intermediate Floor]^3 + E x PLRC[Intermediate Floor]^4

R^2 Range: 0.9338 to 0.9997

Climate Zone	Building	A	B	C	D	E
CZ3 (Oakland)	1980	14.614	1.591	7.699	-9.158	4.965
	1990	14.267	1.514	7.547	-9.048	4.907
	2005	11.669	1.252	6.139	-7.374	4.011
CZ9 (Pasadena)	1980	19.859	0.208	27.112	-62.199	51.365
	1990	19.390	0.296	22.953	-50.140	38.975
	2005	16.325	3.979	-2.383	0.365	6.147
CZ12 (Sacramento)	1980	20.955	2.906	7.532	-15.125	15.643
	1990	20.198	2.783	7.468	-15.694	15.968
	2005	15.724	3.131	0.236	-0.982	5.966

Table II-4b. Cooling Tower Electricity Consumption - Example Values

Cooling Part Load Ratio (Intermediate Floor)	Predicted Cooling Tower Electricity Consumption (kW) (Whole Building)
0	0.000
0.5	16.500
0.8	18.159

Table II-5a. Boiler Electricity Equation - Low PLRH

(PLRH[Intermediate Floor] <= ~ 0.40)

Boiler Electricity (Building, kW) =
A + B x PLRH[Intermediate Floor] + C x PLRH[Intermediate Floor]^2

R^2 Range: 0.9924 to 0.9977

Climate Zone	Building	PLRH <=	A	B	C
CZ3 (Oakland)	1980	0.387	0.530	57.568	2.401
	1990	0.370	0.495	56.688	2.303
	2005	0.410	0.402	41.619	1.344
CZ9 (Pasadena)	1980	0.310	0.392	54.011	7.356
	1990	0.315	0.371	52.832	4.766
	2005	0.348	0.322	34.293	4.139
CZ12 (Sacramento)	1980	0.357	0.661	74.052	8.906
	1990	0.335	0.583	72.013	5.284
	2005	0.345	0.380	43.743	5.713

Table II-5b. Boiler Electricity Equation - High PLRH

(PLRH[Intermediate Floor] > ~ 0.40)

Boiler Electricity (Building, kW) = A

R^2 Range: 1.000

Climate Zone	Building	PLRH >	A
CZ3 (Oakland)	1980	0.387	23.195
	1990	0.370	21.731
	2005	0.410	17.797
CZ9 (Pasadena)	1980	0.310	17.966
	1990	0.315	17.478
	2005	0.348	12.747
CZ12 (Sacramento)	1980	0.357	28.270
	1990	0.335	25.661
	2005	0.345	16.149

Table II-5c. Boiler Electricity Consumption - Example Values

Heating Part Load Ratio (Intermediate Floor)	Predicted Boiler Electricity Consumption (kW) (Whole Building)
0	0.0
0.2	12.1
0.5	23.2

Table II-6a. Boiler Fuel Equation - Low PLRH

(PLRH[Intermediate Floor] <= ~ 0.40)

Boiler Fuel (Building, Btu/h) =
A + B x PLRH[Intermediate Floor] + C x PLRH[Intermediate Floor]^2

R^2 Range: 0.9990 to 0.9997

Climate Zone	Building	PLRH <=	A	B	C
CZ3 (Oakland)	1980	0.387	33,611	3,648,544	152,214
	1990	0.370	31,341	3,592,824	145,799
	2005	0.410	25,463	2,637,797	84,964
CZ9 (Pasadena)	1980	0.310	24,834	3,423,115	466,319
	1990	0.315	23,536	3,348,410	301,913
	2005	0.348	20,388	2,173,399	262,440
CZ12 (Sacramento)	1980	0.357	41,880	4,693,275	564,484
	1990	0.335	37,007	4,563,984	335,031
	2005	0.345	24,089	2,772,405	361,904

Table II-6b. Boiler Fuel Equation - High PLRH

(PLRH[Intermediate Floor] > ~ 0.40)

Boiler Fuel (Building, Btu/h) = A + B x PLRH[Intermediate Floor]

R^2 Range: 0.9984 to 0.9996

Climate Zone	Building	PLRH >	A	B
CZ3 (Oakland)	1980	0.387	447,637	2,651,439
	1990	0.370	423,385	2,603,255
	2005	0.410	333,343	1,934,786
CZ9 (Pasadena)	1980	0.310	365,870	2,538,821
	1990	0.315	356,207	2,452,285
	2005	0.348	244,708	1,646,832
CZ12 (Sacramento)	1980	0.357	562,719	3,462,940
	1990	0.335	516,927	3,318,081
	2005	0.345	319,932	2,068,909

Table II-6c. Boiler Fuel Consumption - Example Values

Heating Part Load Ratio (Intermediate Floor)	Predicted Boiler Fuel Consumption (Btu/h) (Whole Building)
0	0
0.2	769,400
0.5	1,773,400

APPENDIX III: ENERGY PERFORMANCE IMPACTS

Table III-1. Leakage Impacts on Annual Energy Use

		Annual Site Energy Use [MWh]												
CZ	Vintage	Supply Fan	Return Fan	Both Fans	Cooling Coil	Reheat Coils	Chiller Electricity	Tower Electricity	Cooling Energy	Boiler Electricity	Boiler Fuel	Heating Energy	Total Electricity	Total Energy
		10 + 10 (Upstream + Downstream) Leaks												
3	Old	141	49	190	1,201	232	297	77	374	13	257	270	578	835
	New	141	49	190	1,194	204	292	75	367	12	236	249	570	806
	T24	121	43	164	1,041	146	255	67	322	8	154	162	494	648
9	Old	134	47	181	2,572	323	531	104	635	19	406	425	835	1,241
	New	133	47	179	2,626	421	513	103	616	24	524	548	819	1,343
	T24	109	39	148	2,120	175	415	91	505	9	200	209	663	862
12	Old	154	54	208	2,162	385	439	94	532	23	441	464	763	1,204
	New	152	53	205	2,101	332	423	90	513	20	400	420	739	1,139
	T24	118	42	160	1,737	184	350	77	427	11	215	226	597	813
		7.5 + 7.5 (Upstream + Downstream) Leaks												
3	Old	122	43	165	1,109	235	285	76	361	14	261	275	540	801
	New	122	43	165	1,107	208	281	75	355	13	241	254	532	773
	T24	105	37	142	959	148	245	66	311	8	156	164	461	616
9	Old	117	41	159	2,466	334	516	103	618	19	421	440	796	1,217
	New	117	41	158	2,495	437	495	102	597	25	543	568	780	1,323
	T24	95	34	129	2,026	180	403	90	493	10	206	216	632	837
12	Old	134	47	181	2,077	389	427	93	520	23	446	469	724	1,169
	New	132	46	178	2,019	336	412	90	502	21	405	425	701	1,105
	T24	102	36	139	1,667	186	340	76	417	11	218	229	566	784
		10 + 2.5 (Upstream + Downstream) Leaks												
3	Old	120	42	162	1,096	242	283	76	359	14	269	283	535	804
	New	119	42	161	1,091	216	279	75	353	13	250	263	528	778
	T24	102	36	138	943	152	243	66	309	8	160	168	455	615
9	Old	120	42	162	2,492	359	520	103	623	21	452	473	805	1,257
	New	121	43	164	2,534	470	501	102	603	27	583	610	793	1,376
	T24	95	34	129	2,031	191	404	90	494	10	219	229	633	852
12	Old	132	47	179	2,070	396	426	93	518	24	454	478	721	1,176
	New	131	46	177	2,010	344	410	90	500	21	415	436	698	1,113
	T24	101	36	136	1,656	190	339	76	415	11	224	235	563	787
		2.5 + 10 (Upstream + Downstream) Leaks												
3	Old	110	39	148	1,044	232	276	76	352	13	257	270	513	770
	New	109	38	148	1,042	204	272	74	346	12	236	249	506	743
	T24	94	33	127	904	146	237	66	303	8	154	162	438	592
9	Old	102	36	138	2,347	323	498	101	599	19	406	425	756	1,162
	New	102	36	137	2,365	421	478	101	579	24	524	548	740	1,264
	T24	84	30	113	1,940	175	392	89	482	9	200	209	604	804
12	Old	119	42	161	2,010	385	417	93	510	23	441	464	693	1,135
	New	117	41	159	1,955	332	403	90	492	20	400	420	671	1,071
	T24	91	32	124	1,615	184	333	76	409	11	215	226	543	759
		5 + 5 (Upstream + Downstream) Leaks												
3	Old	107	38	144	1,028	239	274	76	350	14	265	279	508	773
	New	107	38	144	1,026	212	270	74	344	13	246	259	501	747
	T24	91	32	124	885	150	235	66	301	8	158	166	433	591
9	Old	104	37	141	2,369	346	501	101	603	20	436	456	764	1,200
	New	105	37	142	2,401	453	483	101	584	26	563	589	751	1,314
	T24	84	30	113	1,942	185	392	89	482	10	212	222	605	817
12	Old	117	41	158	2,001	392	416	93	509	23	450	473	691	1,141
	New	116	41	156	1,945	340	401	89	491	21	410	431	668	1,078
	T24	89	32	121	1,603	188	332	76	408	11	221	232	540	761
		2.5 + 2.5 (Upstream + Downstream) Leaks												
3	Old	94	33	128	953	242	264	76	339	14	269	283	481	750
	New	94	33	127	952	216	260	74	334	13	250	264	474	725
	T24	80	29	109	820	152	226	66	292	8	160	168	409	569
9	Old	93	33	126	2,282	359	489	101	589	21	452	473	737	1,189
	New	95	34	128	2,314	470	472	101	572	27	583	610	727	1,310
	T24	74	26	101	1,866	191	383	89	472	10	219	229	583	802
12	Old	104	37	140	1,933	396	406	92	499	24	455	478	663	1,117
	New	102	36	139	1,878	344	392	89	481	21	415	437	641	1,056
	T24	79	28	107	1,546	190	324	76	400	11	224	235	518	742

Table III-2a. Fractional Impacts of Leakage on Energy Uses

		Total Energy Use [%]			Electrical Use [%]			Energy Increase Due to Leakage [%]						
CZ	Vintage	Both Fans	Cooling Energy	Heating Energy	Both Fans	Cooling Energy	Heating Energy	Both Fans	Cooling Coil	Reheat Coils	Cooling Energy	Heating Energy	Total Electricity	Total Energy
		10 + 10 (Upstream + Downstream) Leaks												
3	Old	23	45	32	33	65	2	49	26	-4	10	-5	20	11
	New	24	46	31	33	65	2	49	25	-5	10	-6	20	11
	T24	25	50	25	33	65	2	50	27	-4	10	-4	21	14
9	Old	15	51	34	22	76	2	43	13	-10	8	-10	13	4
	New	13	46	41	22	75	3	40	13	-10	8	-10	13	2
	T24	17	59	24	22	76	1	47	14	-9	7	-9	14	8
12	Old	17	44	39	27	70	3	48	12	-3	7	-3	15	8
	New	18	45	37	28	69	3	48	12	-3	7	-4	15	8
	T24	20	53	28	27	71	2	50	12	-3	7	-4	15	10
	Avg	19	49	32	27	70	2	47	17	-6	8	-6	16	8
	Min	13	44	24	22	65	1	40	12	-10	7	-10	13	2
	Max	25	59	41	33	76	3	50	27	-3	10	-3	21	14
		7.5 + 7.5 (Upstream + Downstream) Leaks												
3	Old	21	45	34	31	67	3	29	16	-3	6	-3	12	7
	New	21	46	33	31	67	2	29	16	-4	6	-4	12	7
	T24	23	50	27	31	67	2	30	17	-2	6	-3	13	8
9	Old	13	51	36	20	78	2	25	8	-7	5	-7	8	2
	New	12	45	43	20	77	3	23	8	-7	4	-7	7	1
	T24	15	59	26	20	78	2	28	9	-6	4	-6	8	4
12	Old	15	44	40	25	72	3	29	7	-2	4	-2	9	5
	New	16	45	38	25	72	3	29	7	-2	4	-3	9	5
	T24	18	53	29	24	74	2	30	8	-2	4	-3	9	6
	Avg	17	49	34	25	72	2	28	11	-4	5	-4	10	5
	Min	12	44	26	20	67	2	23	7	-7	4	-7	7	1
	Max	23	59	43	31	78	3	30	17	-2	6	-2	13	8
		10 + 2.5 (Upstream + Downstream) Leaks												
3	Old	20	45	35	30	67	3	27	15	0	6	0	11	7
	New	21	45	34	31	67	2	27	15	0	6	0	11	7
	T24	22	50	27	30	68	2	27	15	0	6	0	11	8
9	Old	13	50	38	20	77	3	28	9	0	6	0	9	6
	New	12	44	44	21	76	3	28	10	0	5	0	9	5
	T24	15	58	27	20	78	2	28	9	0	5	0	9	6
12	Old	15	44	41	25	72	3	28	7	0	4	0	9	5
	New	16	45	39	25	72	3	27	7	0	4	0	9	5
	T24	17	53	30	24	74	2	28	7	0	4	0	9	6
	Avg	17	48	35	25	72	3	27	10	0	5	0	10	6
	Min	12	44	27	20	67	2	27	7	0	4	0	9	5
	Max	22	58	44	31	78	3	28	15	0	6	0	11	8

Table III-2b. Fractional Impacts of Leakage on Energy Uses

		Total Energy Use [%]			Electrical Use [%]			Energy Increase Due to Leakage [%]						
CZ	Vintage	Both Fans	Cooling Energy	Heating Energy	Both Fans	Cooling Energy	Heating Energy	Both Fans	Cooling Coil	Reheat Coils	Cooling Energy	Heating Energy	Total Electricity	Total Energy
		2.5 + 10 (Upstream + Downstream) Leaks												
3	Old	19	46	35	29	69	3	16	10	-4	4	-5	7	3
	New	20	47	34	29	68	2	16	9	-5	4	-6	7	3
	T24	22	51	27	29	69	2	17	10	-4	4	-4	7	4
9	Old	12	52	37	18	79	2	9	3	-10	2	-10	3	-2
	New	11	46	43	19	78	3	7	2	-10	1	-10	2	-4
	T24	14	60	26	19	80	2	12	4	-9	2	-9	4	0
12	Old	14	45	41	23	74	3	14	4	-3	2	-3	5	2
	New	15	46	39	24	73	3	15	4	-3	2	-4	5	1
	T24	16	54	30	23	75	2	16	4	-3	2	-4	5	2
	Avg	16	50	35	24	74	2	14	6	-6	3	-6	5	1
	Min	11	45	26	18	68	2	7	2	-10	1	-10	2	-4
	Max	22	60	43	29	80	3	17	10	-3	4	-3	7	4
		5 + 5 (Upstream + Downstream) Leaks												
3	Old	19	45	36	28	69	3	13	8	-1	3	-2	6	3
	New	19	46	35	29	69	3	13	8	-2	3	-2	6	3
	T24	21	51	28	29	70	2	14	8	-1	3	-1	6	4
9	Old	12	50	38	18	79	3	11	4	-3	2	-4	4	1
	New	11	44	45	19	78	3	10	4	-4	2	-3	3	0
	T24	14	59	27	19	80	2	12	4	-3	2	-3	4	2
12	Old	14	45	41	23	74	3	13	4	-1	2	-1	4	2
	New	15	46	40	23	73	3	13	4	-1	2	-1	4	2
	T24	16	54	30	22	76	2	13	4	-1	2	-1	4	3
	Avg	16	49	36	23	74	3	13	5	-2	2	-2	5	2
	Min	11	44	27	18	69	2	10	4	-4	2	-4	3	0
	Max	21	59	45	29	80	3	14	8	-1	3	-1	6	4
		2.5 + 2.5 (Upstream + Downstream) Leaks												
3	Old	17	45	38	27	71	3							
	New	18	46	36	27	70	3							
	T24	19	51	30	27	71	2							
9	Old	11	50	40	17	80	3							
	New	10	44	47	18	79	4							
	T24	13	59	29	17	81	2							
12	Old	13	45	43	21	75	4							
	New	13	46	41	22	75	3							
	T24	14	54	32	21	77	2							
	Avg	14	49	37	22	75	3							
	Min	10	44	29	17	70	2							
	Max	19	59	47	27	81	4							

APPENDIX IV: EQUIPMENT SIZING IMPACTS

Table IV-1a. Leakage Impacts on Equipment Sizing

		Maximum Airflows [scfm]			Zone Part Load Flow Ratio		Maximum Load [kW]		Increase Due to Leakage [%]			
		Supply	VAV	Zone	Avg	RMS	Cooling	Reheat	Supply	VAV	Cooling	Reheat
CZ	Vintage	Fan	Boxes	Supply			Coil	Coils	Fan	Boxes	Coil	Coils
		10 + 10 (Upstream + Downstream) Leaks										
3	Old	14,615	13,311	11,980	0.57	0.13	138	77	16	8	8	5
	New	14,513	13,212	11,891	0.57	0.14	134	69	16	8	8	5
	T24	11,317	10,264	9,238	0.62	0.13	119	59	17	8	8	6
9	Old	18,078	15,956	14,361	0.59	0.09	155	52	19	8	7	2
	New	17,988	15,612	14,051	0.63	0.07	160	54	21	8	12	2
	T24	12,756	11,235	10,111	0.65	0.09	141	38	19	8	9	4
12	Old	17,463	15,774	14,197	0.58	0.12	175	99	17	8	8	6
	New	17,001	15,363	13,826	0.58	0.13	169	86	17	8	8	5
	T24	11,719	10,503	9,453	0.65	0.12	142	53	18	8	9	5
				Avg	0.61	0.11			18	8	9	4
				Min	0.57	0.07			16	8	7	2
				Max	0.65	0.14			21	8	12	6
		7.5 + 7.5 (Upstream + Downstream) Leaks										
3	Old	13,877	12,951	11,980	0.57	0.13	134	75	10	5	5	3
	New	13,779	12,855	11,891	0.58	0.13	131	68	10	5	5	3
	T24	10,735	9,987	9,238	0.62	0.13	116	58	11	5	5	4
9	Old	17,031	15,525	14,361	0.60	0.08	151	52	12	5	5	1
	New	16,877	15,190	14,051	0.64	0.07	149	54	13	5	5	1
	T24	12,011	10,931	10,111	0.66	0.09	137	37	12	5	6	2
12	Old	16,547	15,348	14,197	0.58	0.12	170	97	11	5	5	4
	New	16,110	14,947	13,826	0.58	0.13	164	85	11	5	5	3
	T24	11,083	10,219	9,453	0.65	0.12	137	52	11	5	6	3
				Avg	0.61	0.11			11	5	5	3
				Min	0.57	0.07			10	5	5	1
				Max	0.66	0.13			13	5	6	4
		10 + 2.5 (Upstream + Downstream) Leaks										
3	Old	13,491	12,287	11,980	0.58	0.12	133	73	7	0	4	0
	New	13,396	12,196	11,891	0.58	0.13	130	66	7	0	4	0
	T24	10,447	9,475	9,238	0.63	0.12	115	56	8	0	4	0
9	Old	16,687	14,729	14,361	0.61	0.08	151	51	10	0	5	0
	New	16,605	14,411	14,051	0.66	0.06	152	53	11	0	7	0
	T24	11,775	10,370	10,111	0.67	0.08	137	36	10	0	5	0
12	Old	16,120	14,561	14,197	0.59	0.11	169	93	8	0	4	0
	New	15,693	14,181	13,826	0.59	0.12	163	82	8	0	4	0
	T24	10,818	9,695	9,453	0.66	0.11	136	51	9	0	5	0
				Avg	0.62	0.10			9	0	5	0
				Min	0.58	0.06			7	0	4	0
				Max	0.67	0.13			11	0	7	0

Table IV-1b. Leakage Impacts on Equipment Sizing

		Maximum Airflows [scfm]			Zone Part Load Flow Ratio		Maximum Load [kW]		Increase Due to Leakage [%]			
CZ	Vintage	Supply Fan	VAV Boxes	Zone Supply	Avg	RMS	Cooling Coil	Reheat Coils	Supply Fan	VAV Boxes	Cooling Coil	Reheat Coils
		2.5 + 10 (Upstream + Downstream) Leaks										
3	Old	13,612	13,311	11,980	0.57	0.13	132	77	8	8	3	5
	New	13,512	13,212	11,891	0.57	0.14	129	69	8	8	3	5
	T24	10,507	10,264	9,238	0.62	0.13	114	59	8	8	4	6
9	Old	16,446	15,956	14,361	0.59	0.09	148	52	8	8	3	2
	New	16,160	15,612	14,051	0.63	0.07	143	54	8	8	1	2
	T24	11,586	11,235	10,111	0.65	0.09	134	38	8	8	3	4
12	Old	16,164	15,774	14,197	0.58	0.12	167	99	8	8	4	6
	New	15,741	15,363	13,826	0.58	0.13	161	86	8	8	3	5
	T24	10,784	10,503	9,453	0.65	0.12	134	53	8	8	4	5
				Avg	0.61	0.11			8	8	3	4
				Min	0.57	0.07			8	8	1	2
				Max	0.65	0.14			8	8	4	6
		5 + 5 (Upstream + Downstream) Leaks										
3	Old	13,195	12,610	11,980	0.58	0.13	131	74	5	3	2	1
	New	13,101	12,517	11,891	0.58	0.13	127	67	5	3	2	1
	T24	10,197	9,724	9,238	0.62	0.13	113	57	5	3	3	2
9	Old	16,068	15,116	14,361	0.61	0.08	147	51	6	3	2	1
	New	15,857	14,790	14,051	0.65	0.06	145	54	6	3	2	1
	T24	11,326	10,643	10,111	0.66	0.09	133	37	6	3	3	1
12	Old	15,702	14,944	14,197	0.58	0.12	166	95	5	3	3	2
	New	15,289	14,554	13,826	0.59	0.12	160	83	5	3	3	2
	T24	10,496	9,951	9,453	0.66	0.11	133	51	5	3	3	1
				Avg	0.61	0.11			5	3	2	1
				Min	0.58	0.06			5	3	2	1
				Max	0.66	0.13			6	3	3	2
		2.5 + 2.5 (Upstream + Downstream) Leaks										
3	Old	12,565	12,287	11,980	0.58	0.12	128	73				
	New	12,473	12,196	11,891	0.58	0.13	125	66				
	T24	9,699	9,475	9,238	0.63	0.12	110	56				
9	Old	15,181	14,729	14,361	0.61	0.08	144	51				
	New	14,917	14,411	14,051	0.66	0.06	142	53				
	T24	10,695	10,370	10,111	0.67	0.08	130	36				
12	Old	14,921	14,561	14,197	0.59	0.11	162	94				
	New	14,530	14,181	13,826	0.59	0.12	156	82				
	T24	9,954	9,695	9,453	0.66	0.11	130	51				
				Avg	0.62	0.10						
				Min	0.58	0.06						
				Max	0.67	0.13						

APPENDIX V: OPERATING COST IMPACTS

Table V-1a. Leakage Impacts on Annual HVAC System Operating Costs

		Annual Operating Cost [$]				Cost Increase Due to Leakage					
		Both				Fans	Cooling	Heating	Total		
CZ	Vintage	Fans	Cooling	Heating	Total	$/yr	$/yr	$/yr	$/yr	%	$/ft2
		10 + 10 (Upstream + Downstream) Leaks									
3	Old	18,754	36,907	8,088	63,749	6,170	3,457	-390	9,237	17	0.18
	New	18,721	36,227	7,435	62,383	6,172	3,320	-445	9,047	17	0.17
	T24	16,134	31,793	4,842	52,769	5,409	2,994	-198	8,204	18	0.16
9	Old	17,848	62,643	12,523	93,014	5,376	4,533	-1,422	8,487	10	0.16
	New	17,694	60,689	16,127	94,510	5,049	4,264	-1,837	7,475	9	0.14
	T24	14,598	49,836	6,178	70,611	4,658	3,299	-605	7,352	12	0.14
12	Old	20,489	52,490	13,851	86,831	6,638	3,334	-435	9,538	12	0.18
	New	20,254	50,630	12,508	83,392	6,592	3,163	-506	9,249	12	0.18
	T24	15,782	42,077	6,715	64,574	5,249	2,675	-283	7,642	13	0.15
				Avg	74,648	5,701	3,449	-680	8,470	13	0.16
				Min	52,769	4,658	2,675	-1,837	7,352	9	0.14
				Max	94,510	6,638	4,533	-198	9,538	18	0.18
		7.5 + 7.5 (Upstream + Downstream) Leaks									
3	Old	16,270	35,594	8,217	60,081	3,685	2,145	-261	5,569	10	0.11
	New	16,235	35,014	7,583	58,832	3,686	2,107	-298	5,496	10	0.10
	T24	13,958	30,662	4,908	49,528	3,233	1,862	-132	4,963	11	0.09
9	Old	15,631	60,971	12,974	89,576	3,159	2,861	-970	5,050	6	0.10
	New	15,602	58,853	16,724	91,178	2,957	2,427	-1,240	4,144	5	0.08
	T24	12,689	48,618	6,378	67,685	2,750	2,081	-405	4,426	7	0.08
12	Old	17,803	51,262	13,997	83,062	3,952	2,106	-289	5,769	7	0.11
	New	17,588	49,465	12,674	79,726	3,925	1,999	-340	5,583	8	0.11
	T24	13,659	41,103	6,808	61,569	3,126	1,701	-191	4,637	8	0.09
				Avg	71,249	3,386	2,143	-458	5,071	8	0.10
				Min	49,528	2,750	1,701	-1,240	4,144	5	0.08
				Max	91,178	3,952	2,861	-132	5,769	11	0.11
		10 + 2.5 (Upstream + Downstream) Leaks									
3	Old	15,967	35,402	8,477	59,846	3,382	1,953	-1	5,334	10	0.10
	New	15,916	34,828	7,880	58,624	3,368	1,921	-1	5,288	10	0.10
	T24	13,606	30,467	5,039	49,113	2,881	1,668	-1	4,548	10	0.09
9	Old	15,953	61,399	13,943	91,295	3,480	3,290	-1	6,769	8	0.13
	New	16,124	59,437	17,963	93,523	3,479	3,012	-1	6,489	7	0.12
	T24	12,747	48,672	6,782	68,201	2,808	2,135	0	4,942	8	0.09
12	Old	17,665	51,120	14,284	83,070	3,814	1,965	-2	5,777	7	0.11
	New	17,413	49,302	13,013	79,728	3,751	1,836	-1	5,585	8	0.11
	T24	13,449	40,939	6,997	61,385	2,916	1,537	-1	4,452	8	0.08
				Avg	71,643	3,320	2,146	-1	5,465	8	0.10
				Min	49,113	2,808	1,537	-2	4,452	7	0.08
				Max	93,523	3,814	3,290	0	6,769	10	0.13

Table V-1b. Leakage Impacts on Annual HVAC System Operating Costs

		Annual Operating Cost [$]				Cost Increase Due to Leakage					
		Both				Fans	Cooling	Heating	Total		
CZ	Vintage	Fans	Cooling	Heating	Total	$/yr	$/yr	$/yr	$/yr	%	$/ft2
		2.5 + 10 (Upstream + Downstream) Leaks									
3	Old	14,598	34,682	8,089	57,369	2,014	1,233	-389	2,857	5	0.05
	New	14,577	34,116	7,436	56,129	2,028	1,209	-445	2,793	5	0.05
	T24	12,567	29,868	4,843	47,277	1,842	1,068	-197	2,713	6	0.05
9	Old	13,652	59,087	12,524	85,263	1,180	978	-1,421	737	1	0.01
	New	13,553	57,074	16,128	86,754	908	648	-1,836	-280	0	-0.01
	T24	11,156	47,481	6,178	64,815	1,217	944	-605	1,556	2	0.03
12	Old	15,826	50,291	13,853	79,970	1,975	1,135	-433	2,677	3	0.05
	New	15,660	48,535	12,510	76,704	1,998	1,068	-505	2,562	3	0.05
	T24	12,183	40,355	6,716	59,254	1,650	953	-282	2,321	4	0.04
				Avg	68,171	1,646	1,026	-679	1,993	3	0.04
				Min	47,277	908	648	-1,836	-280	0	-0.01
				Max	86,754	2,028	1,233	-197	2,857	6	0.05
		5 + 5 (Upstream + Downstream) Leaks									
3	Old	14,244	34,494	8,346	57,084	1,660	1,044	-131	2,573	5	0.05
	New	14,208	33,917	7,731	55,857	1,660	1,010	-149	2,520	5	0.05
	T24	12,182	29,678	4,973	46,833	1,457	879	-67	2,269	5	0.04
9	Old	13,874	59,428	13,452	86,754	1,401	1,318	-492	2,227	3	0.04
	New	13,952	57,581	17,336	88,869	1,307	1,155	-627	1,835	2	0.03
	T24	11,164	47,504	6,579	65,247	1,225	967	-203	1,988	3	0.04
12	Old	15,625	50,185	14,140	79,951	1,774	1,030	-146	2,658	3	0.05
	New	15,425	48,406	12,842	76,673	1,762	940	-172	2,530	3	0.05
	T24	11,936	40,227	6,901	59,065	1,404	826	-97	2,132	4	0.04
				Avg	68,481	1,516	1,019	-232	2,303	4	0.04
				Min	46,833	1,225	826	-627	1,835	2	0.03
				Max	88,869	1,774	1,318	-67	2,658	5	0.05
		2.5 + 2.5 (Upstream + Downstream) Leaks									
3	Old	12,585	33,450	8,478	54,512						
	New	12,549	32,907	7,881	53,336						
	T24	10,725	28,799	5,040	44,564						
9	Old	12,472	58,110	13,944	84,526						
	New	12,645	56,426	17,964	87,035						
	T24	9,939	46,537	6,783	63,259						
12	Old	13,852	49,156	14,285	77,293						
	New	13,662	47,466	13,014	74,143						
	T24	10,533	39,401	6,998	56,933						
				Avg	66,178						
				Min	44,564						
				Max	87,035						