An Integrated FIB/SEM System for Direct Doping or Surface Modification*

Q. Ji [a)] and B. Appleton
Center for Imaging and Mesoscale Structures, Harvard University, Cambridge, MA 02138
L. Ji [b)], F. Gicquel, S. B. Wilde, and K.-N. Leung [b)]
Lawrence Berkeley National Laboratory, University of California, Berkeley, CA 94720

Current research to understand the science associated with mesoscale structures has shown the need for new approaches to the fabrication of future small-scale structures. For many projects, gallium is an undesirable contaminant. Therefore, conventional FIB systems which utilize gallium liquid metal ion sources to achieve nanometer resolution severely limits applications and fundamental studies. Technology of selectively doping/modifying small regions in nanoscale device structures is needed to eliminate complex masking, implantation, evaporation, diffusion, annealing, and lift-off steps that become increasingly difficult as device dimensions shrink. Lack of integrated diagnostics in conventional systems also limits the information available from nanofabrication experiments. Integrated FIB/SEM dual-beam system would not only improve the accuracy, resolution and reproducibility when performing ion beam sculpting[1] and direct implantation processes, but also enable researchers to perform cross-sectioning, imaging, and analysis with one tool[2,3].

A FIB/SEM dual-beam system is being developed at Harvard University and Lawrence Berkeley National Laboratory. It employs a mini-RF driven plasma source[4] to generate various ion species of focused ion beam[5] and a FEI two-lens electron (2LE) column for SEM imaging, as shown in Figure 1. The FEI 2LE column, which utilizes Schottky emission, proprietary electrostatic focusing optics, and stacked-disk column construction, can provide high-resolution (as small as 20 nm) imaging capability, with fairly long working distance (25 mm) at 25 keV beam voltage. The mini-RF plasma source (Figure 2a) consists of a ceramic chamber with 1.5 cm inner diameter and a two-layer copper wires as external antenna. Through a 50-μm-diameter extraction aperture, the current density of Ar^+ ions that can be extracted reaches as high as 100 mA/cm^2 at only 150 W of input RF power (Figure 2b). An all-electrostatic two-lens system has been designed to focus the ion beam extracted from the source. Base on the ion optics simulation, beam spot size of as small as 300 nm can be achieved at beam energy range from 5-35 keV if a 50-μm-diameter extraction aperture is used. Smaller beam spot size can be achieved with small aperture at sacrifice of some beam current. The system is under construction and will be tested in the next few months. Results will be presented at the conference.

* *This work is supported by NSF under contract No. DMR-0216297and the U.S. Department of Energy under contract No. DE-AC03-76SF0098.*
[a)] *Email address:* QJi@lbl.gov
[b)] *also with Department of Nuclear Engineering, University of California, Berkeley, CA 94720, U.S.A.*

[1] J. Li, *et al.*, "Ion-beam sculpting at nanometer length scales", *Nature*, Vol. 412, p166 (2001).
[2] S. Berger, *et al.*, "DualBeam metrology: A new technique for optimizing 0.13 μm photo processes", Proceeding of SPIE Vol. 4344, p423 (2001).
[3] D. Sidawi, "Integrated FIB/SEM systems streamline throughput", *R&D Magazine*, Nov. 2003, p33.
[4] X. Jiang, *et al.*, "Mini rf-driven ion sources for focused ion beam systems", *Rev. Sci. Instrum.* ***74***, 2288 (2003).
[5] Q. Ji, *et al.*, "Production of various species of focused ion beam", *Rev. Sci. Instrum.* ***73***, 822 (2002).

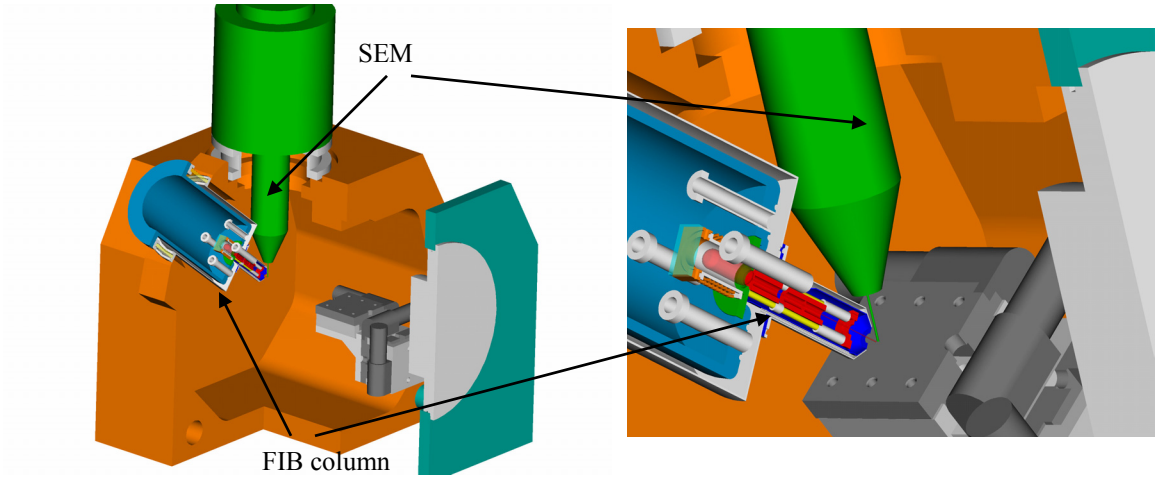

Figure 1: Schematic diagram of the FIB/SEM dual beam system.

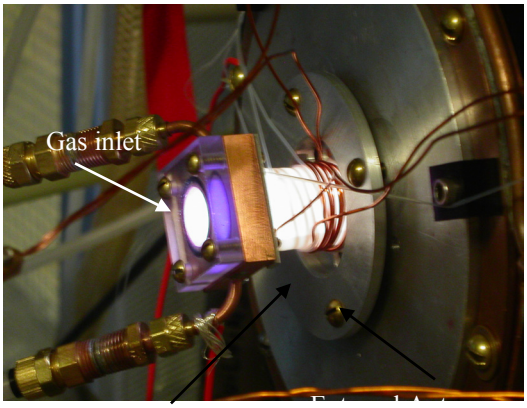

(a)

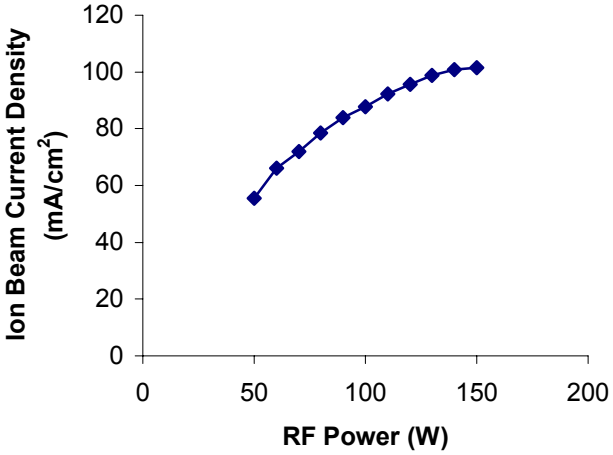

(b)

Figure 2: (a) Ar plasma generated using a mini-rf ion source. **(b)** Ar^+ ion beam current density extracted from the source through a 50 μm diameter aperture, as a function of input RF power.

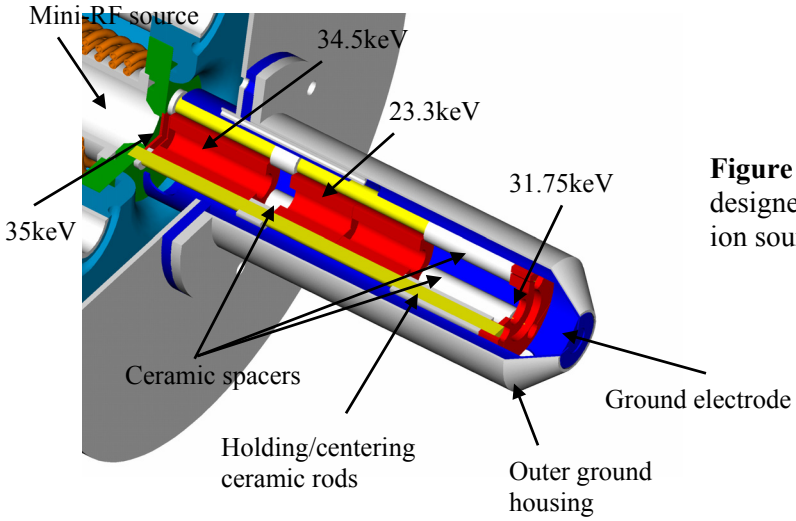

Figure 3: An all-electrostatic two-lens system is designed to focus the ion beam extracted from the ion source.